IAAF Track and Field Facilities Manual

2008 EDITION

IAAF ATHLETICS

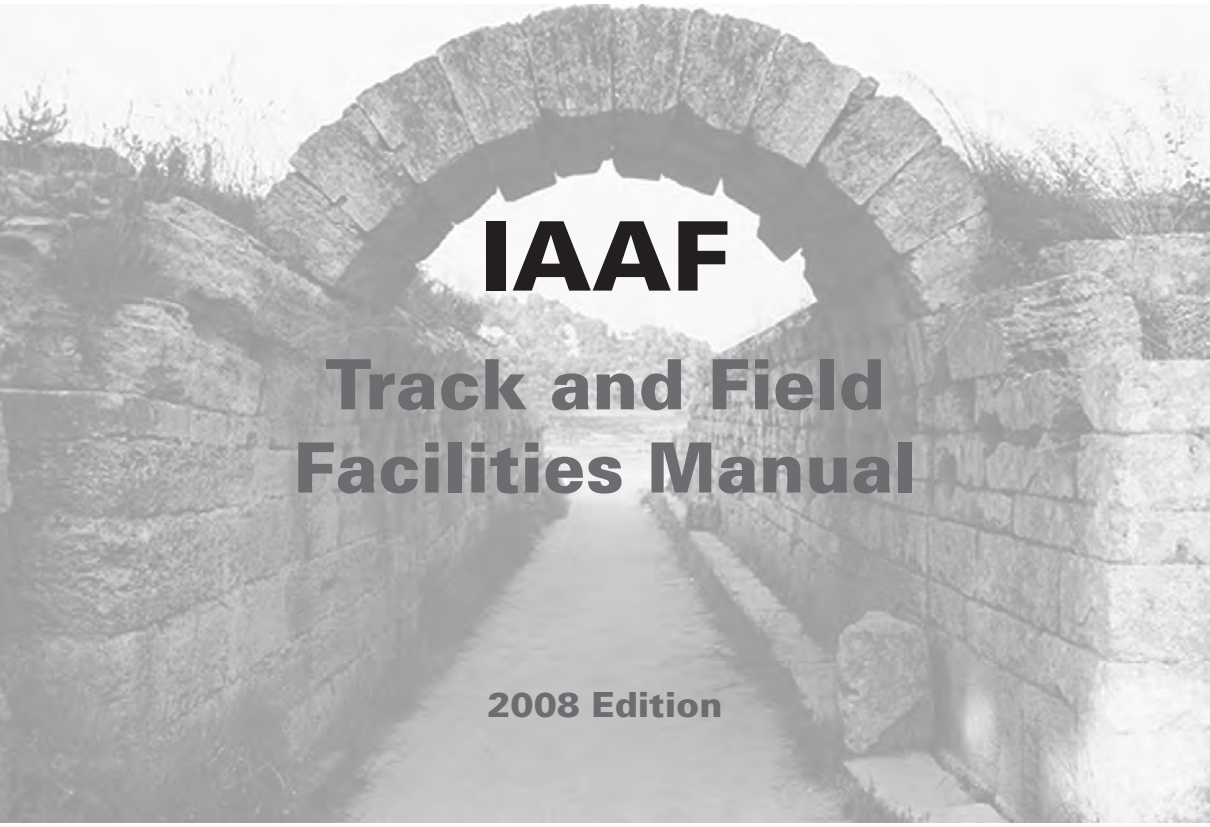

IAAF

Track and Field Facilities Manual

2008 Edition

IAAF Requirements for Planning,
Constructing, Equipping and Maintaining

© IAAF 2000 ©

IAAF PRESIDENT'S MESSAGE

I am delighted to acknowledge the publication of this the latest edition of the renowned IAAF Track and Field Facilities Manual which as always will provide the athletics community with an invaluable source of technical information, so helping to bring consistency and precision to the general management of Track and Field facilities around the world.

As we have come to expect from previous editions this manual covers every aspect of the planning, construction, equipping and maintenance of these facilities, and responds to the various changes in Rules which have been implemented since the previous volume was published in 2003.

The IAAF continuously works to have more certified facilities around the globe with the aim of setting an international standard for the various products used in athletics - from equipment to track surfaces. The IAAF has a worldwide responsibility to guarantee the validity and accuracy of performances and therefore of all products which help athletes achieve their performances.

Therefore it is essential to have a clear and up-to-date reference book on building athletics facilities, and I would like to thank the authors for their diligence in making this manual a definitive reference work on the subject. It is in a sense the most natural "extension" of our Competition Rules with respect to technical details.

Lamine Diack
IAAF President

Edited by: ***IAAF Track and Field Facilities Manual Editorial Board***

Denis Wilson
IAAF Technical Committee Consultant
Chairman of the Editorial Board

Rickard Bryborn
Swedish Athletic Federation

Al Guy
Member of the IAAF Technical Committee

David Katz
IAAF Technical Committee Stadia Working Group

Imre Matrahazi
IAAF Technical Manager

Klaus Meinel
Managing Director, International Association for Sports and Leisure Facilities (IAKS)

Jorge Salcedo
Chairman, IAAF Technical Committee

Kari Wauhkonen
Chairman, IAAF Technical Committee Stadia Working Group

Cover: Stade de France, Paris Saint-Denis
Photos: Getty Images

Layout and Printing by: Multiprint (Monaco)

Editorial Management: Imre Matrahazi and Denis Wilson

Distributed and Produced by: International Association of Athletics Federations

Copyright by: IAAF - 2008

Published by: Editions EGC
ISBN 2-911469-37-2

CONTRIBUTORS

The IAAF Track and Field Facilities Manual EDITORIAL BOARD gratefully acknowledges the contributions of all those listed below.

Chapter 1 and 2	Klaus Meinel *Managing Director, International Association for Sports and Leisure Facilities (IAKS)*
Chapter 3	Vic Watson *Director of the Centre for Sports Technology, London*
Chapter 4 and 8.8	Anna Legnani *IAAF Deputy Communications Director* Ernest Obeng *IAAF Broadcasting Director*
Chapter 5	Klaus Meinel, *Managing Director, IAKS* Matthew Cobham *LiDAC International, Philips Lighting B.V.*
Chapter 6	Editorial Board
Chapter 7	Editorial Board
Chapter 8	Rickard Bryborn *Technical Advisor*
Figures	Imre Matrahazi *IAAF Technical Manager*
Track Marking Plans	Editorial Board Mondo SpA.

INTRODUCTION

While establishing the IAAF Performance Specifications for Synthetic Surfaces Outdoors in association with the International Association for Sports Surface Sciences (ISSS), it became very clear to the IAAF Technical Committee from discussions with track manufacturers and others in the industry that guidelines for the planning of Track and Field facilities were very necessary.

At the same time the International Association for Sports and Leisure Facilities (IAKS) had also identified this requirement in respect to the special aspects of athletics.

Based on a proposal submitted by IAKS and funded by the International Athletic Foundation, the IAKS and the IAAF Technical Committee embarked on an exhaustive study aimed at providing a comprehensive reference work.

Thanks to the further close co-operation between these two groups and to the invaluable input of many experts, firms involved in the industry and athletics persons throughout the world we are pleased to present after 1995, 1999 and 2003, this fourth edition of the IAAF Manual as a comprehensive guide to future construction of Track and Field facilities.

The Manual is intended for use by stadium planners and as an essential guide to IAAF member federations, national and municipal authorities and all involved in the planning, constructing and running of facilities for Track and Field athletics. It is not intended to be a complete text book on how to design athletics facilities but rather to provide specific information that may not otherwise be available to designers.

The Editorial Board made up of members of the IAAF Technical Committee and the IAKS took advantage of this new edition to revise the contents of the manual. With the cooperation of the authors, Chapters 3 (Construction of the Track) and 8 (Facilities for Indoor Athletics) have been extensively revised, and a number of suggestions from readers have been included. At the same time some editorial changes were made and printing errors were corrected.

The fourth edition reflects the latest knowledge and experience available in this field and introduces new contributors. We would like to dedicate this edition to two of the original team who died just before the issue of the third edition. Tony Rottenburg, former Honorary Technical Consultant to the IAAF and the creator of many items of Track and Field equipment as owner of the firm Cantabrian, and Professor Frieder Roskam the late General Secretary of IAKS each contributed greatly to the original project under the leadership of former Technical Committee Chairman Carl Gustav Tollemar.

We are also providing this edition in an electronic version for reference by practitioners whilst away from the office.

The Editors

TABLE OF CONTENTS

Chapter 1: General Aspects of Planning *11*

1.1 COMPETITION RULES
1.2 USE OF FACILITIES
1.3 COMPETITION CLASSIFICATION
1.4 SELECTION OF THE VENUE
1.5 CONSTRUCTION CATEGORIES
1.6 DEMAND FOR SPORTS FACILITIES
1.7 LOCATION OF THE SPORTS FACILITY
1.8 SAFETY OF SPECTATORS AND ATHLETES

Chapter 2: Competition Area *27*

2.1 GENERAL REMARKS
2.2 FACILITIES FOR TRACK EVENTS
2.3 FACILITIES FOR JUMPING EVENTS
2.4 FACILITIES FOR THROWING EVENTS
2.5 LAYOUT OF THE "STANDARD COMPETITION AREA"
2.6 ALTERNATIVES FOR TRAINING FACILITIES

Chapter 3: Construction of the Track *87*

3.1 SYNTHETIC SURFACES
3.2 FOUNDATION REQUIREMENTS
3.3 SURFACE DRAINAGE
3.4 GROUND DRAINAGE
3.5 WATERING OF SPORTS SURFACES

Chapter 4: Ancillary Rooms *145*

4.1 ROOMS FOR SPORT
4.2 ROOMS FOR THE MEDIA
4.3 OPERATIONAL ROOMS AND ROOMS FOR COMPETITION ORGANISATION
4.4 ROOMS FOR ADMINISTRATION AND MAINTENANCE
4.5 OTHER DESIGN ISSUES

Chapter 5: Technical Services *191*

5.1 LIGHTING AND POWER
5.2 MEASUREMENTS
5.3 SCOREBOARDS
5.4 PUBLIC ADDRESS (PA) SYSTEMS
5.5 TELEVISION MONITORING SYSTEMS
5.6 TECHNICAL SERVICES FOR THE MEDIA

Chapter 6: Competition Equipment Specifications .. *229*

6.1 EQUIPMENT FOR TRACK EVENTS
6.2 EQUIPMENT FOR JUMPING EVENTS
6.3 EQUIPMENT FOR THROWING EVENTS

Chapter 7: Maintenance *245*

7.1 GENERAL ASPECTS
7.2 MAINTENANCE OF COMPETITION AND TRAINING SURFACES
7.3 MAINTENANCE OF TECHNICAL INSTALLATIONS

Chapter 8: Facilities For Indoor Athletics *257*

8.1 SPECIAL FEATURES OF INDOOR ATHLETICS
8.2 REQUIREMENTS, DESIGN PRINCIPLES AND GUIDELINES
8.3 TRACK CONSTRUCTION
8.4 HALL FINISH AND INSTALLATION
8.5 ADDITIONAL SPORTS ROOMS
8.6 ALTERNATIVES FOR COMPETITION AND TRAINING FACILITIES
8.7 ANCILLARY ROOMS
8.8 FACILITIES AND TECHNICAL SERVICES FOR THE MEDIA
8.9 COMPETITION EQUIPMENT SPECIFICATIONS

CONTENTS - CHAPTER 1
GENERAL ASPECTS OF PLANNING

1.1 Competition Rules 13

1.1.1 COMPETITION RULES PUBLICATION 13
1.1.2 TRACK AND FIELD FACILITIES MANUAL 13
1.1.3 SUITABILITY FOR COMPETITION 13
1.1.4 IAAF CERTIFICATION SYSTEM 13

1.2 Use of Facilities 14

1.2.1 GENERAL 14
1.2.2 UNIFORM SPORTS FACILITIES 14
1.2.3 ADDITIONAL USE FOR SPORTING ACTIVITIES 14
1.2.4 ADDITIONAL USE FOR NON-SPORTING ACTIVITIES 15

1.3 Competition Classification 17

1.3.1 GENERAL 17
1.3.2 COMPETITION CATEGORIES 17
1.3.3 OTHER COMPETITIONS 18

1.4 Selection of the Venue 19

1.5 Construction Categories 19

1.5.1 GENERAL 19
1.5.2 CATEGORIES 19
1.5.3 REQUIREMENTS OF CONSTRUCTION CATEGORIES 19
1.5.4 EXCEPTIONS 21

1.6 Demand for Sports Facilities 21

1.6.1 GENERAL 21
1.6.2 SPORTING ACTIVITIES OF THE POPULATION 21
1.6.3 UTILISATION CAPACITY OF SPORTS FACILITIES 21
1.6.4 DEMAND BASED ON REQUIREMENTS AND SUPPLY 21
1.6.5 BASIC SPORTS FACILITIES 22
1.6.6 KEY SPORTS FACILITIES 22
1.6.7 PLANNING SPORTS FACILITIES 22

1.7 Location of the Sports Facility 23

1.7.1 GENERAL 23
1.7.2 SIZE OF LAND 23
1.7.3 SOIL CONDITIONS 23
1.7.4 MICROCLIMATE 23
1.7.5 ENVIRONMENTAL CONDITIONS 23
1.7.6 TRANSPORT NETWORK 24
1.7.7 SUPPLY AND WASTE DISPOSAL 24

1.8 Safety of Spectators and Athletes 25

1.8.1 CIRCULATION 25
1.8.2 SAFETY MARGINS 25

CHAPTER 1
GENERAL ASPECTS OF PLANNING

1.1 Competition Rules

1.1.1 COMPETITION RULES PUBLICATION

Track and Field athletics and its events of running, walking, jumping and throwing are governed by the Rules of the International Association of Athletics Federations (IAAF). These are published every two years in the IAAF Competition Rules.

The Rules ensure equal conditions for competition and form the basis for standardisation and acceptance of the competition facilities.

1.1.2 TRACK AND FIELD FACILITIES MANUAL

In order to comply with modern standards of construction, the International Association of Athletics Federations decided to publish this "Track and Field Facilities Manual" in addition to the IAAF Competition Rules. The manual contains detailed and more clearly defined specifications for the planning and construction of Track and Field facilities than those contained in the IAAF Competition Rules. The aim is to pay greater attention to technical and performance requirements of Track and Field facilities.

1.1.3 SUITABILITY FOR COMPETITION

In order to establish the suitability of a sports facility for competition, proof is required of fulfilment of the requirements listed in this manual by certificates testifying to the Construction Category, the observance of the measurements and, when relevant, the suitability of the synthetic surface.

1.1.4 IAAF CERTIFICATION SYSTEM

The IAAF has introduced a certification programme based upon the goal that all facilities, synthetic surfaces, implements and equipment built for use in international competitions conform to IAAF specifications and therefore guarantees the validity of the performances and the quality of the product.

It is the IAAF's duty as the sport's world governing body for athletics to ensure that all athletics items used in international competitions are of the requisite standard, manufactured in accordance with IAAF technical requirements, and, most importantly, guarantee the safety of the athletes.

There has been a rapid development in the manufacture of athletics equipment over recent years, including implements and synthetic track surfaces, resulting in an increased number of products on the market. These are not all of the same quality. It also recognises the growing trend towards international standardisation of product specifications, as well as the need to prevent unauthorised usage of the IAAF name.

The Certification System Procedures are available on the IAAF website (www.iaaf.org) and from the IAAF Office upon request.

1.2 Use of Facilities

1.2.1 GENERAL

Sports facilities for Track and Field athletics are generally used for daily training as well as for staging regional or local competitions. The staging of competitions at higher levels normally entails more extensive requirements for the sports facility, particularly in respect of the infrastructure.

1.2.2 UNIFORM SPORTS FACILITIES

In order to ensure equal conditions for all athletes, uniform facilities are necessary particularly since competitions are held in many different venues. Furthermore, the athletes need the same conditions for training that they will find in competition. This manual is subdivided into different competition categories (1.3) and construction categories (1.5) on the basis of competition requirements.

For training in high-performance training centres, for example, it is possible to deviate from a particular Construction Category by providing additional opportunities for training such as a special throwing field, two sprint tracks, and a special landing mat for High Jump or more individual facilities.

1.2.3 ADDITIONAL USE FOR SPORTING ACTIVITIES

It is normal for an athletics track to be used for other sports. Generally, this involves using the interior of the 400m tracks as a pitch for soccer, American football or rugby. Obstacle-free sports areas in the segments at the same level as the playing field without kerbs over which sportsmen could stumble can be included in the safety zones. The dimensions of the area necessary for these additional sporting uses are given in Tables 1.2.3a and 1.2.3b for the 400m Standard Track (Figure 1.2.3a) and for double bend tracks (Figures 1.2.3b and 1.2.3c). In the case of double bend tracks in Figure 1.2.3d, the dimensions apply to American football only.

	Type of 400m Oval Track			
	Standard Track	**Double Bend Track**		
R = Radius	R = 36.50	R1 = 51.543 R2 = 34.000	R1 = 48.00 R2 = 24.00	R1 = 40.022 R2 = 27.082
G = Straights	G = 84.39	G = 79.996	G = 98.52	G = 97.256
F = Figure	F = 1.2.3a	F = 1.2.3b	F = 1.2.3c	F = 1.2.3d
Rectangular Interior **Width** **Length**	 73.00 84.39	 80.000 79.996	 72.00 98.52	 69.740 97.256
Dimension of Segment **Width** **Length**	 73.00 36.50	 80.000 35.058	 72.00 27.22	 69.740 29.689

Table 1.2.3a - Dimension of interior of 400m Oval Track (in m)

Sport	Pitch Size				Safety Zone		Total Standard Size	
	Under Competition Rules		Standard Size		Long Sides	Short Sides		
	Width	Length	Width	Length			Width	Length
Football (Soccer)	45-90	90-120	68	105	1	2	70	109
FIFA Matches	64-75	100-110	68	105	5	5	78	115
American Football[1]	48.80	109.75	48.80	109.75	1	2	50.80	113.75
Rugby[2]	68-70	97-100	70	100	3.50-5	10-22	77-80	120-144

[1] In this case, athletics use may be hampered in the segment areas
[2] A slight rounding of the corners of the "touch down" areas by bending the segment arcs will be necessary

Table 1.2.3b - Field dimension of interior of 400m Oval Track when used for other sports (in m)

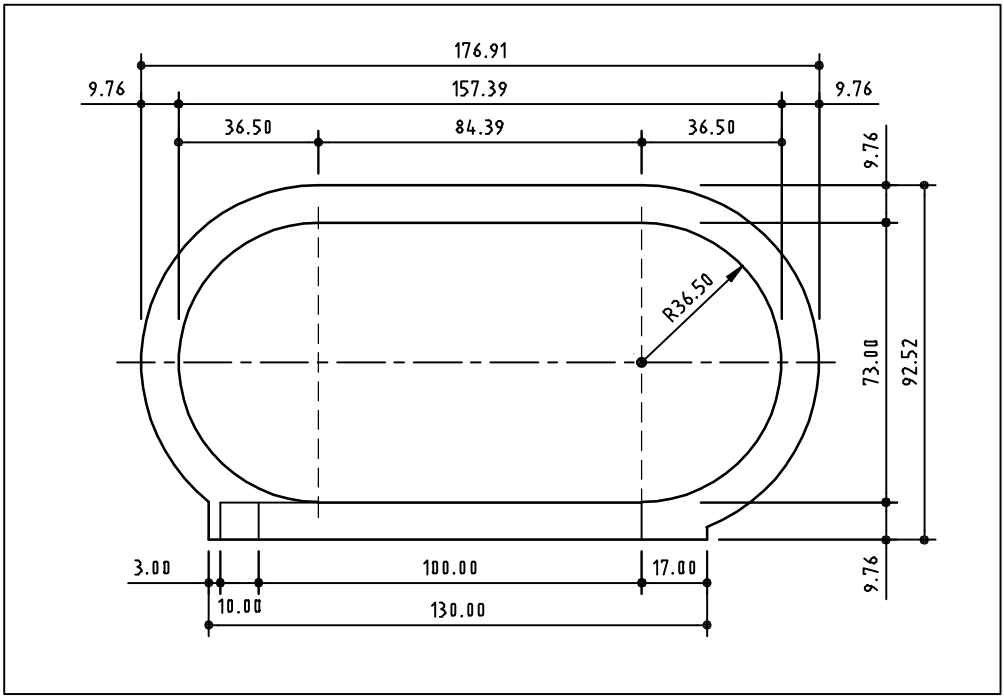

Figure 1.2.3a - Shape and dimensions of the 400m Standard Track (Radius 36.50m)
(Dimensions in m)

1.2.4 ADDITIONAL USE FOR NON-SPORTING ACTIVITIES

Since Track and Field facilities for top class competitions are furnished with spectator stands, non-sporting events, such as open-air concerts and public assemblies can also be held in them. In certain circumstances, these may require measures of protection for the track and for the infield (See Chapter 7).

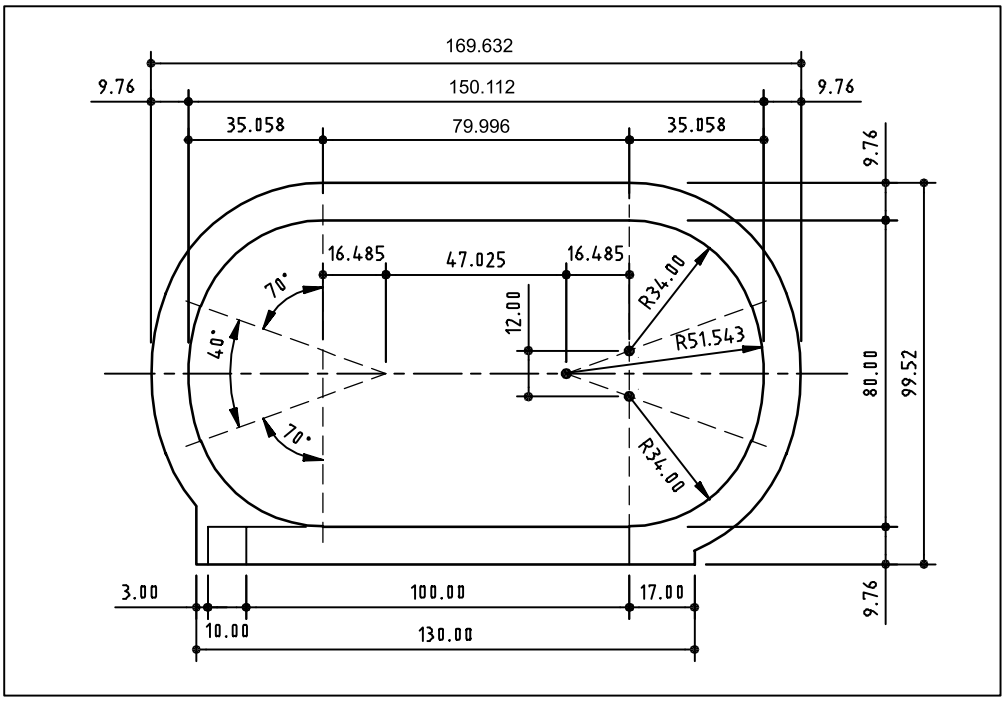

Figure 1.2.3b - Shape and dimensions of 400m Double Bend Track (Radii 51.543m and 34.00m)
(Dimensions in m)

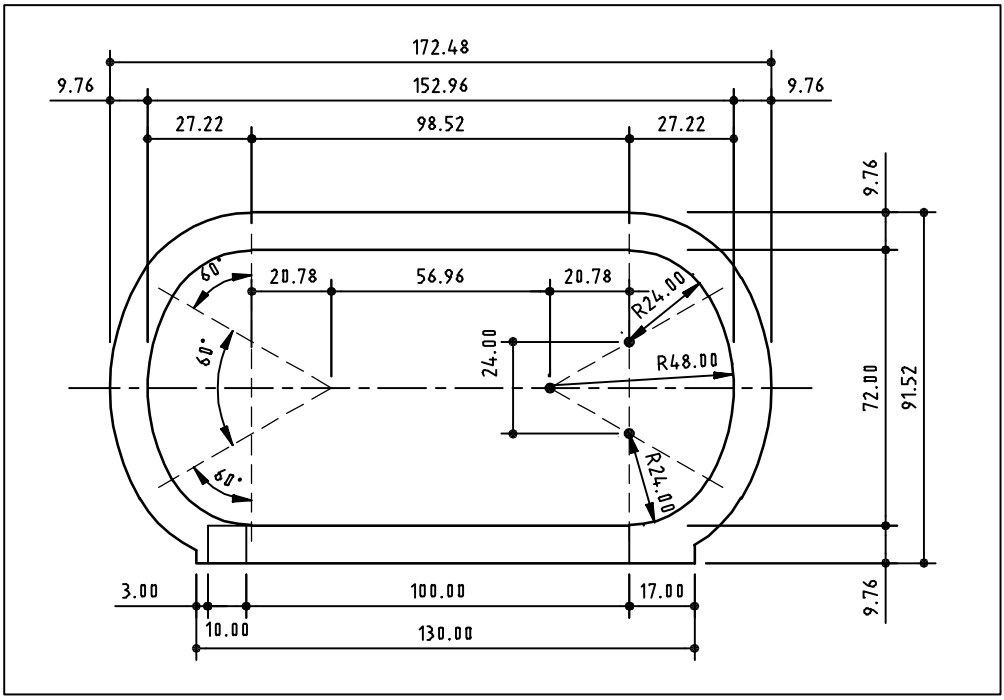

Figure 1.2.3c - Shape and dimensions of 400m Double Bend Track (Radii 48m and 24m)
(Dimensions in m)

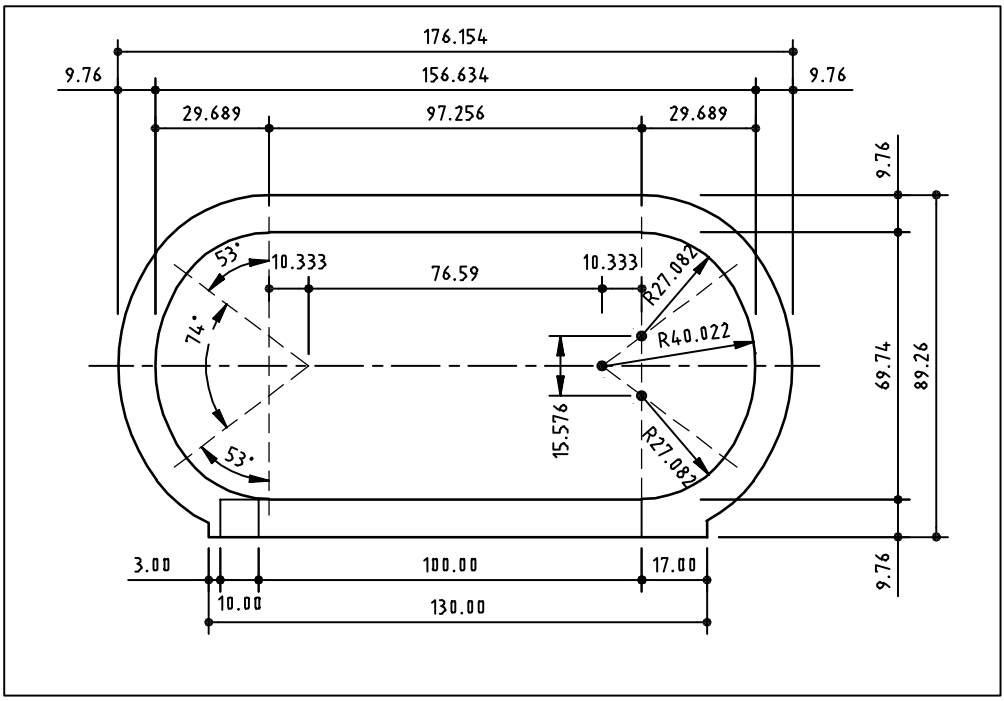

Figure 1.2.3d - Shape and dimensions of 400m Double Bend Track (Radii 40.022m and 27.082m)
(Dimensions in m)

1.3 Competition Classification

1.3.1 GENERAL

When planning an athletics facility, the types of competition events to be staged there must be taken into account - especially with regard to the type and number of individual facilities, the service rooms and the spectator area.

The ranking of a competition is defined as "competition category". Outdoor competition categories have been subdivided under 1.3.2 according to the type of competition, the duration of the competition and reference data in respect of the number of athletes, competition officials, auxiliary personnel and spectators. The indoor competition categories are given separately in Chapter 8.

Of particular importance for the planning of facilities is whether multi-sports events (such as the Olympic Games) or Track and Field Events only are to be staged.

In the case of the latter, a distinction must be made between those competitions which last several days (for example, World Championships) or those which are concentrated within one or two days (for example, international matches).

1.3.2 COMPETITION CATEGORIES

Table 1.3.2 provides an overview of the various competition categories. In columns 3 to 5, the approximate maximum number of athletes, competition officials

Competition Category	Event[1]	Approximate Maximum Number of Participants at Any One Time			Number of Days	Recommended Construction Category	Authorising Body[1]
		Athletes	Competition Officials	Auxiliary Personnel			
1	World Championships and Olympic Games	75	100	75	9	I	IAAF, IOC IAAF Rule 1.1(a)
2	World Cups	30	60	50	3	III[2]	
3	Continental, Regional and Area Championships	75	75	60	4 - 8	II	Continental, Regional or Area Association IAAF Rule 1.1(c),(f),(g)
4	Continental, Regional and Area Cups	50	60	50	2	III	
5	Group Games	50	50	30	4 - 5	II	Group Association IAAF Rule 1.1(b),(g)
6	Matches	50	60	30	1 - 2	III	IAAF, Area or National Federation IAAF Rule 1.1(d),(h) and Rule 2.7
7	International Invitation Meetings specifically authorised by IAAF	50	30	30	1	III	IAAF IAAF Rule 1.1(e)(i)
8	International Invitation Meetings specifically authorised by an Area Association	50	30	30	1	III	Area Association IAAF Rule 1.1(j)
9	Other Meetings specifically authorised by an Area or a Member and National Championships	75	60	30	2 - 4	IV	Area Association or National Federation IAAF Rule 1.1(i) and Rule 2.7
10	Combined Events	50	50	30	2	IV	As appropriate
11	Other National Competitions					V	National Federation IAAF Rule 2.7

[1] In accordance with IAAF Rule 1.1 and Rule 2.7
[2] Warm-up track must conform to Competition Category I

Table 1.3.2 - Competition Categories; number of athletes, officials and auxiliary personnel

and auxiliary personnel on the arena at any one time is given. The total number of these type people at a competition can be many times greater. Column 6 gives the approximate duration of an athletics meeting. The items I to V listed in column 7 "Construction Category" refer to Section 1.5. Finally, column 8 states the authority responsible for allocation and technical control at the international, continental, regional or national level, with the exception of the Olympic Games for which the IOC is responsible for allocation and various Group Games for which Group Associations have responsibility.

1.3.3 OTHER COMPETITIONS

Each country may modify technical requirements in respect of domestic competitions.

1.4 Selection of the Venue

The venue is selected by the organisers. In addition to the Construction Category for the competition facility required for the respective competition, other factors of importance for the choice of venue are:

- The accessibility for international or national transport network
- The infrastructure
- Accommodation and care of participants (Also 1.7)

1.5 Construction Categories

1.5.1 GENERAL

Sports facilities for the staging of competitions at higher levels are subdivided into different Construction Categories. An early decision is needed on the appropriate Construction Category for the highest level of competition likely to be conducted on the facility. It may be possible to add additional warm-up facilities and Field Event facilities at a later date but sufficient space must be allowed for these in the early planning. The rating "Construction Category" is determined by the relevant authorising body (Section 1.3). For this, confirmation of the suitability of the sports facility for competition is required which is documented by:

- A certificate confirming observance of the minimum requirements of the respective Construction Category (See 1.5)
- A certificate confirming observance of measurements for individual components of the sports facilities (See 2.1 to 2.5)
- A certificate confirming suitability of the synthetic surface
- In special cases a certificate assuring quality in the manufacture of the synthetic surface (See Chapter 3)
- In some cases a certificate for lighting may be necessary

1.5.2 CATEGORIES

In the light of the organisational requirements of the Competition Categories listed in Table 1.3.2, the following five construction categories for Track and Field facilities are recommended:

- Construction Category I for the Competition Category 1
- Construction Category II for the Competition Categories 3 and 5
- Construction Category III for the Competition Categories 2, 4, 6, 7 and 8
- Construction Category IV for Competition Categories 9 and 10
- Construction Category V for Competition Category 11

1.5.3 REQUIREMENTS OF CONSTRUCTION CATEGORIES

The requirements of Table 1.5.3 are minimum requirements. For exceptions, see Section 1.5.4. There is a trend towards some sports, that normally use the infield of athletics arenas, preferring synthetic surfaces on which to play their sport. These synthetic surfaces are generally not suitable for the throwing of athletics implements

		Construction Category				
		I	II	III	IV	V
1	400m Standard Track as described under Chapter 2 with min. 8 oval and 8 straight lanes for 100m and 110m Hurdles	1	1	1	-	-
2	400m Standard Track as line 1, but with 6 oval and 6 straight lanes	-	-	-	1	-
3	400m Standard Track as line 1, but with 4 oval and 6 straight lanes	-	-	-	-	1
4	Water jump for the Steeplechase	1	1	1	-	-
5	Facility for Long and Triple Jump with landing area at each end	2[a)]	2[a)]	1	2	-
6	Facility for Long and Triple Jump with landing area at one end	-	-	-	-	1
7	Facility for High Jump	2	2	1	2	1
8	Facility for Pole Vault with provision for landing area at each end	2[a)]	2[a)]	1	2	-
9	Facility for Pole Vault with provision for landing area at one end	-	-	-	-	1
10	Combined facility for Discus and Hammer throw (separate or concentric circles)	1[b)]	1[b)]	1[b)]	1[c)]	1
11	Facility for Javelin Throw	2[d)]	2[d)]	2[d)]	1	1
12	Facility for Shot Put	2	2	2	2	1
13	Ancillary rooms as described under Chapter 4	*	*	*	*	*
14	Full facilities for spectators	*	*	*	*	*
15	Warm-up area, comprising a 400m Standard Track with min. 4 oval and min. 6 straight lanes (similar surface to the competition track); separate throwing field for Discus, Hammer, Javelin; 2 facilities for Shot Put	*	-	-	-	-
16	Warm-up area, comprising preferably min. a 200m track with min. 4 oval and min. 4 straight lanes (synthetic surface); separate throwing field for Discus, Hammer, Javelin; facility for Shot Put	-	*	-	-	-
17	Warm-up area, comprising min. a 200m track but preferably a 400m Standard Track with min. 4 oval and min. 4 straight lanes; throwing field for Discus, Hammer, Javelin; facility for Shot Put	-	-	*	-	-
18	Warm-up area: adjacent park or playing field	-	-	-	*	-
19	Ancillary rooms e.g. for conditioning and physiotherapy, adequate space for athletes resting between events, with area of min. m^2	250	200	150	200	-

** Required*
[a)] The two facilities must be in the same direction and adjacent to allow simultaneous competition by two groups of competitors with similar conditions
[b)] An additional facility for Discus only may also be provided
[c)] For large events, a second facility outside the stadium but in the same throwing direction is desirable
[d)] One at each end of the area

Table 1.5.3 - Requirements of the Construction Categories

because they are damaged by the implements and/or a satisfactory mark is not made on the synthetic surface so that the judges can determine the first mark made by the fall of the implement.

The highest Construction Category possible for an arena that does not have all the requisite throwing facilities on the main arena is Construction Category III if complying throwing facilities are provided adjacent to the arena.

1.5.4 EXCEPTIONS

In agreement with the appropriate athletics authority, the organisers of a competition may (with the exception of Construction Category I) make exceptions to the respective Construction Category.

1.6 Demand for Sports Facilities

1.6.1 GENERAL

The demand for sports facilities in a town or rural district depends on:

- The current sporting activities of the population
- The sporting interests of the population
- The appeal of opportunities for sporting activities and the way they are organised
- The existing sports facilities

1.6.2 SPORTING ACITVITES OF THE POPULATION

The individual's sporting activities depend on age, profession, financial situation and the local opportunities for sporting activity. The sporting activities of the population as a whole are thus dependent on the organisation structures (school sports, sports for all, competitive sports and leisure sports) and on access to the relevant sports facilities.

1.6.3 UTILISATION CAPACITY OF SPORTS FACILITIES

The degree of utilisation capacity of a sports facility depends on:

- The time available for use in hours per week in terms of the effects of the weather and periods of maintenance
- The time of day and day of the week of possible utilisation in relation to the user's age and profession
- The design of the sports facility with respect to varied sports use and the simultaneous practice of different sports
- The organisation of sports activities with respect to the persons supervising the sportspeople and sports facilities

1.6.4 DEMAND BASED ON REQUIREMENTS AND SUPPLY

The demand for sports facilities is derived from the balance of sporting activities of the population and for physical education on the one hand and the utilisation capacity of the existing sports facilities on the other. Demand does not have to be met alone in the form of additional sports facilities at new locations. It can also be covered by reconstructions, further developments, extensions, reallocation of use or intensification of use. This requires intensive checking and assessment of the existing sports facilities and their degree of utilisation as well as an investigation of the existing and future requirements for sports of the population. Here it is important not to forget

that the respective sporting activities of the population are also subject to the publicity appeal of the local or regional sports federations and that the housing development structure with its population density may reduce or increase the demand on account of problems of distance (distance between home and sports facility) necessarily associated with this.

1.6.5 BASIC SPORTS FACILITIES

Track and Field athletics are counted among the basic disciplines of most sport and, in addition to spaces for ball games, constitute an obvious component of the sports facility structure. Facilities for running, jumping and throwing therefore are necessary on every sports ground of basic supply and on every school sports facility. However, the demand for them, subject to the utilisation structure and to the frequency of use, differs from country to country.

It is recognised that a communities' health is improved by healthy exercise either in organised sport or individual physical activity. Running, jumping and throwing are natural activities for all people but particularly for younger people who have to develop their locomotion skills as well as hand and eye coordination.

1.6.6 KEY SPORTS FACILITIES

Track and field facilities are usually designed as multi-purpose facilities (tracks with playing fields inside). They may be used for sports other than Track and Field Events (See 1.2) and therefore constitute key sports facilities.

They should be located in areas with a larger population density and serviced by an effective transport network.

1.6.7 PLANNING SPORTS FACILITIES

A business plan should be developed in order to justify fully the construction of new sports facilities or improvement of existing facilities. The plan will be an important document for seeking funding.

The business plan might include the following components:

- A needs analysis identifying potential users from clubs, schools and higher education institutions etc for Track and Field competition, and training with usage patterns, and times of usage as well as for other sports users.
- An operational plan that identifies the type of management structure that will be responsible for the day to day operation and maintenance of the facility. The manager could be a single club, a multiple user management committee or an external management authority such as a municipal, state or national body.
- Costing based on an outline brief would include:
  - Consultants' fees
  - Civil engineering work including the synthetic surface
  - Building costs
  - Athletics equipment
  - Operation and maintenance costs on a life cycle basis

- A funding analysis identifying possible capital sports funding sources such as federal, state and/or municipal authorities, philanthropic trusts, and private donations that may attract taxation concessions. Projected use charges will determine whether the cost of operation and maintenance can be funded by users or whether supplementary funding will be required from an external source.

It would be appropriate to have the business plan prepared by a consultant who would interview all the potential stakeholders.

1.7 Location of the Sports Facility

1.7.1 GENERAL

The location selected for a sports facility depends upon the demand as described under Sections 1.6.2 and 1.6.3, the population density within the catchment area and, above all, upon the availability of adequately large areas of land. It is precisely these relatively large spaces required for sports facilities which make the choice of location considerably more difficult in view of the overall shortage of available land in areas with high population densities. An early development of aims within the framework of area and regional planning and early securing of suitable space is therefore necessary. Only in this way will it be possible to supply sports facilities which both meet demand and are suitably located.

1.7.2 SIZE OF LAND

The size of the land shall be at least twice as large and, if possible, three times as large as the required net sports area in order to be able to accommodate suitably landscaped areas between the sports spaces. Only in this way can the desired integration of the sports facility into housing developments and the surrounding natural environment be guaranteed.

1.7.3 SOIL CONDITIONS

Prerequisites for economic construction, operating and maintenance costs are adequate load-bearing soil conditions with maximum possible permeability and a topography which is as level as possible because of the need for large horizontal areas for sport. Filled ground can be very expensive to excavate and recompact to meet the required foundation conditions for a facility.

1.7.4 MICROCLIMATE

A favourable microclimate free of troublesome wind, fog and temperature extremes is particularly important for the optimal use of outdoor facilities for sports.

1.7.5 ENVIRONMENTAL CONDITIONS

The environmental conditions which are of special importance for outdoor sports facilities shall be balanced to ensure either that no troublesome smells, noises, vibrations or dust nuisances will occur or that measures of protection can be implemented to prevent them. Neighbourhoods sensitive to the effects of lights and

noise (vehicles, spectators, sports apparatus, floodlighting) should be avoided or only accepted if suitable measures for protection are implemented. The impairment to, or destruction of, natural or typical elements of the landscape (including biotypes) must be precluded or suitable measures must be implemented to compensate for this.

1.7.6 TRANSPORT NETWORK

An adequate and economically justifiable transport network, including necessary parking spaces, must be feasible. Consideration must be given to the parking requirements of both private and public transport, and sufficient spaces should be allocated to each.

The extent of the provision of public transport (e.g. buses, trains) will determine the area needed for parking for private vehicles (e.g. private buses, cars, motorcycles).

In addition to parking spaces for VIPs, press, athletes, competition officials, auxiliary personnel and attendants, there should be 1 car parking space, (approx. 25m^2) for every 4 spectator spaces or, in the case of an optimal public transport network, 25 spectator spaces and 1 bus park (approx. 50m^2) for every 500 spectator spaces.

1.7.7 SUPPLY AND WASTE DISPOSAL

Adequate and economically justifiable systems of supply for water, energy, telecommunications and waste disposal must be feasible.

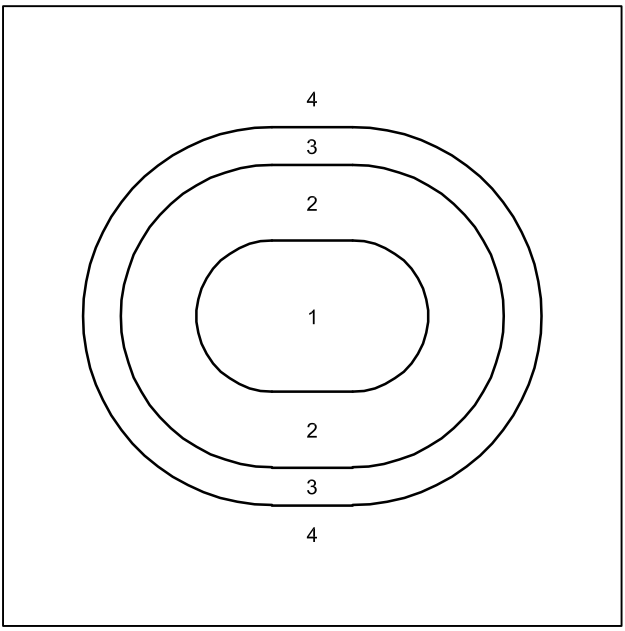

Figure 1.8.1a - Subdivision into zones

1 Central sports / events area
2 Spectator area
3 Perimeter zone
4 Approach / public area

Source: Planning Principles for Sportsgrounds / Stadia, IAKS Series Sports and Leisure Facilities No. 33

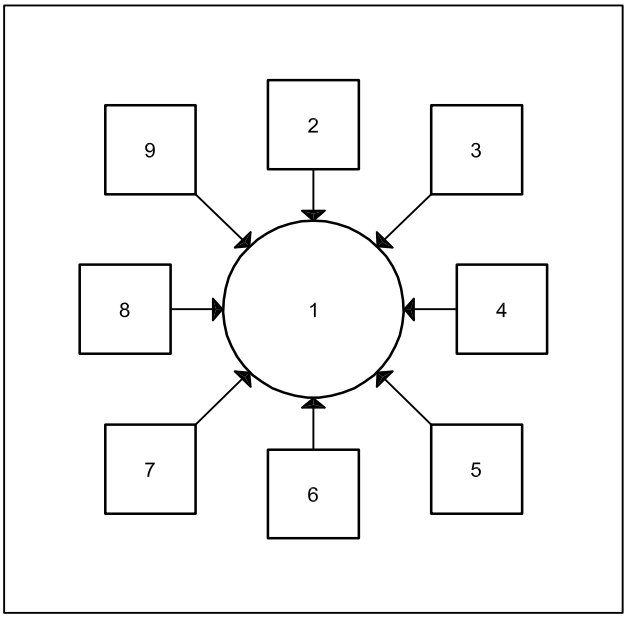

Figure 1.8.1b - Subdivision into individual sections

1 Sports / event area
2 Sports participants
3 Leisure-orientated users
4 Persons involved in non-sporting events
5 Spectators
6 Media
7 Event organisation
8 Stewards and security services
9 Administration maintenance

Source: Planning Principles for Sportsgrounds / Stadia, IAKS Series Sports and Leisure Facilities No. 33

1.8 Safety of Spectators and Athletes

1.8.1 CIRCULATION

A strict division of the circulation systems for spectators and for athletes is of particular importance to the safety of the athletes. For facilities with larger spectator capacities, a separation system between the spectator and the sports areas is essential. (Figures 1.8.1a and 1.8 1b)

1.8.2 SAFETY MARGINS

Due to the integration of various facilities for sports into one large complex which is common today and necessary for economic reasons, the provision of certain safety margins between areas for individual disciplines of sports to preclude any dangerous activities, has become particularly important. The same also applies to the keeping of safety areas free from obstructions of all types. Organisers as well as officials, judges and athletes must pay very special attention to these aspects.

The safe conduct of Track and Field Events is addressed in Chapters 2 and 3.

CONTENTS - CHAPTER 2 COMPETITION AREA

2.1 General Remarks *31*

2.1.1 TYPES OF COMPETITION FACILITIES ***31***

2.1.1.1 Competition Area for Track Events
2.1.1.2 Competition Area for Jumping Events
2.1.1.3 Competition Area for Throwing Events

2.1.2 POSITIONING FOR COMPETITION ***32***

2.1.2.1 Standard Positions
2.1.2.2 Exceptions to Standard Positions
2.1.2.3 Positioning of Spectator Facilities

2.1.3 GRADIENTS FOR TRACKS AND RUNWAYS ***33***

2.1.3.1 Competition Area for Track Events
2.1.3.2 Competition Area for Jumping Events
2.1.3.3 Competition Area for Throwing Events

2.1.4 ARRANGEMENT OF THE FACILITIES ***33***

2.2 Facilities for Track Events *34*

2.2.1 THE 400M STANDARD TRACK ***34***

2.2.1.1 Layout of the 400m Standard Track
2.2.1.2 Gradients of the 400m Standard Track
2.2.1.3 Drainage of the 400m Standard Track
2.2.1.4 Dimensional Accuracy of the 400m Standard Track
2.2.1.5 Safety of the 400m Standard Track
2.2.1.6 Marking of the 400m Standard Track
2.2.1.7 Official Acceptance of the 400m Standard Track
2.2.1.8 Other Layouts for the 400m Oval Track

2.2.2 THE STRAIGHT AS A COMPONENT OF THE 400M STANDARD TRACK ***45***

2.2.2.1 Layout of the Straight Integrated within the 400m Standard Track
2.2.2.2 Gradients of the Straight Integrated within the 400m Standard Track

2.2.3 THE HURDLE RACE TRACK INTEGRATED WITHIN THE 400M STANDARD TRACK ***46***

2.2.3.1 Layout, Gradients and Marking of the Hurdle Race Track Integrated within the 400m Standard Track

2.2.4 THE STEEPLECHASE TRACK INTEGRATED WITHIN THE 400M STANDARD TRACK ***47***

2.2.4.1 Layout of the Steeplechase Track Integrated within the 400m Standard Track
2.2.4.2 Safety of the Steeplechase Track Integrated within the 400m Standard Track
2.2.4.3 Marking for the Steeplechase Track Integrated within the 400m Standard Track
2.2.4.4 Suitability for Competition and Official Acceptance of the Steeplechase Track Integrated within the 400m Standard Track

2.3 Facilities for Jumping Events ***55***

2.3.1 FACILITY FOR LONG JUMP ***55***

2.3.1.1 Layout of the Facility for the Long Jump
2.3.1.2 Runway for the Long Jump
2.3.1.3 Take-off Board for the Long Jump
2.3.1.4 Landing Area for the Long Jump
2.3.1.5 Safety of the Facility for the Long Jump
2.3.1.6 Suitability for Competition and Official Acceptance of the Facility for the Long Jump

2.3.2 FACILITY FOR TRIPLE JUMP ***58***

2.3.2.1 Layout of the Facility for the Triple Jump
2.3.2.2 Runway for the Triple Jump
2.3.2.3 Take-off Board for the Triple Jump

2.3.3 FACILITY FOR HIGH JUMP ***58***

2.3.3.1 Layout of the Facility for the High Jump
2.3.3.2 Runway for the High Jump
2.3.3.3 Uprights for the High Jump
2.3.3.4 Landing Mats for the High Jump
2.3.3.5 Safety of the Facility for the High Jump
2.3.3.6 Suitability for Competition and Official Acceptance of the Facility for the High Jump

2.3.4 FACILITY FOR POLE VAULT ***60***

2.3.4.1 Layout of the Facility for the Pole Vault
2.3.4.2 Runway for the Pole Vault with Box
2.3.4.3 Uprights for the Pole Vault
2.3.4.4 Landing Mats for the Pole Vault
2.3.4.5 Safety of the Facility for Pole Vault
2.3.4.6 Suitability for Competition and Official Acceptance of the Facility for the Pole Vault

2.4 Facilities for Throwing Events ***62***

2.4.1 FACILITY FOR DISCUS THROW ***62***

2.4.1.1 Layout of the Facility for the Discus Throw
2.4.1.2 Throwing Circle for the Discus Throw
2.4.1.3 Safety Cage for the Discus Throw
2.4.1.4 Landing Sector for the Discus Throw
2.4.1.5 Safety of the Facility for the Discus Throw
2.4.1.6 Suitability for Competition and Official Acceptance of the Facility for the Discus Throw

2.4.2 FACILITY FOR HAMMER THROW ***65***

2.4.2.1 Layout of the Facility for the Hammer Throw
2.4.2.2 Throwing Circle for the Hammer Throw
2.4.2.3 Safety Cage for the Hammer Throw
2.4.2.4 Landing Sector for the Hammer Throw
2.4.2.5 Safety of the Facility for the Hammer Throw
2.4.2.6 Suitability for Competition and Official Acceptance of the Facility for the Hammer Throw

2.4.3 FACILITY FOR JAVELIN THROW ***68***

2.4.3.1 Layout of the Facility for the Javelin Throw
2.4.3.2 Runway for the Javelin Throw
2.4.3.3 Throwing Arc for the Javelin Throw
2.4.3.4 Landing Sector for the Javelin Throw
2.4.3.5 Safety of the Facility for the Javelin Throw
2.4.3.6 Suitability for Competition and Official Acceptance of the Facility for the Javelin Throw

2.4.4 FACILITY FOR SHOT PUT ***71***

2.4.4.1 Layout of the Facility for the Shot Put
2.4.4.2 Throwing Circle for the Shot Put
2.4.4.3 Stop Board for the Shot Put
2.4.4.4 Landing Sector for the Shot Put
2.4.4.5 Safety of the Facility for the Shot Put
2.4.4.6 Suitability for Competition and Official Acceptance of the Facility for the Shot Put

2.5 Layout of the "Standard Competition Area" ***73***

2.6 Alternatives for Training Facilities ***77***

2.6.1 TRAINING FACILITIES FOR THE STRAIGHT ***78***
2.6.2 TRAINING FACILITIES FOR THE LONG AND TRIPLE JUMP ***78***
2.6.3 TRAINING FACILITIES FOR THE HIGH JUMP ***80***
2.6.4 TRAINING FACILITIES FOR THE POLE VAULT ***82***
2.6.5 TRAINING FACILITIES FOR THROWING AND SHOT PUT EVENTS ***82***
2.6.6 OTHER COMBINED TRAINING FACILITIES ***83***

CHAPTER 2
COMPETITION AREA

2.1 General Remarks

Track and Field athletics include competition areas for running, walking, jumping and throwing events. These are normally integrated into an arena, the design of which is dictated by the 400m oval track. The competition areas are first dealt with individually and then regarding their integration into the arena.

The dimensions given are to be adhered to. Permissible deviations are given as tolerances (+ or ± or –) after each figure. All linear measurements and levels shall be made to the nearest whole mm.

This Manual stipulates dimensions and equipment for international and other high class competition by elite athletes. For club and school competitions, the dimensions of horizontal jumps landing areas, distance to take-off boards, the lengths of runways, dimensions of landing areas etc. may be reduced. The safety of athletes must be paramount in making such decisions. If you are in doubt as to what is appropriate consult your national athletics federation.

2.1.1 TYPES OF COMPETITION FACILITIES

2.1.1.1 Competition Area for Track Events

The Competition area for Track Events includes:

- Oval track with at least 4 lanes (400m + 0.04m x 1.22m ± 0.01m) and safety zones measuring not less than 1.00m on the inside and preferably 1.00m on the outside
- Straight with at least 6 lanes (100m + 0.02m x 1.22m ± 0.01m for sprints and 110m + 0.02m x 1.22m ± 0.01m for hurdles)
  Starting area: 3m min. (for 110m Hurdles, category V 2.5m min.).
  Run-out: 17m min.
- Steeplechase track as for oval track with a permanent water jump (3.66m x 3.66m x 0.50m-0.70m) placed inside or outside the second bend

2.1.1.2 Competition Area for Jumping Events

The competition area for jumping events includes:

- Facility for Long Jump with runway (40m min. x 1.22m ± 0.01m), take-off board (1.22m ± 0.01m x 0.20m ± 0.002m x 0.10m max.), placed between 1m and 3m from the nearer end of the landing area, and the landing area 2.75m min. wide with the far end at least 10m min. from the take-off line).
- Facility for Triple Jump as for Long Jump except for a take-off board placed 13m min. for men or 11m min. for women from the nearer end of the landing area for international competitions. For any other competition, this distance shall be appropriate for the level of competition.

- Facility for High Jump with a semicircular runway (radius 20m min.) and landing area (6m x 4m min.).
- Facility for Pole Vault with a runway (40m min. x 1.22m ± 0.01m), a box for inserting the pole and landing area (6m x 6m min.) with an additional forward extension.

2.1.1.3 Competition Area for Throwing Events

The competition area for throwing events includes:

- Facility for Discus Throw with throwing circle (2.50m ± 0.005m diameter), protective cage and landing sector (80m radius, 48m chord)
- Facility for Hammer Throw with throwing circle (2.135m ± 0.005m diameter), protective cage and landing sector (90m radius, 54m chord)
- Facility for Javelin Throw with runway (30m min. x 4m), arc with a radius of 8m and landing sector (100m radius, 50.00m chord)
- Facility for Shot Put with throwing circle (2.135m ± 0.005m diameter) stop board (1.21m ± 0.01m x 0.112m x 0.10m ± 0.02m) and landing sector (25m radius, 15m chord)

2.1.2 POSITIONING FOR COMPETITION

2.1.2.1 Standard Positions

When installing all Track and Field facilities, careful consideration must be given to the position of the sun at critical times of day and the wind conditions.

To avoid the dazzling effect of the sun when it is low, the longitudinal axis of arenas should lie along the north-south axis, although it is possible to deviate to the north-north-east and north-north-west.

The strength and direction of local winds should also be taken into consideration. This may result in the main straight being on the eastern side of the arena and, consequently, will require consideration of the effects of a western setting sun on the spectators in the main stand. However, the most important aspect of design is to ensure that the best possible competition conditions are provided for the athletes.

2.1.2.2 Exceptions to Standard Positions

Departures from the standard positions for specific facilities (e.g. High Jump, Pole Vault) are permissible if the stadium is situated in a location where the sun's rays do not reach those facilities.

Where deviations from the standard positions are necessitated by the local conditions (e.g. steep hill position, unfavourable layout of the land, existing developments), any possible disadvantages this may cause the athletes must be carefully considered.

Particularly serious disadvantages may necessitate the selection of an alternative site.

2.1.2.3 Positioning of Spectator Facilities

Spectator facilities should, if possible, be positioned to face east but also see above. Where there are two stands opposite each other, or all-round spectator facilities, this shall apply to the main stand.

2.1.3 GRADIENTS FOR TRACKS AND RUNWAYS

2.1.3.1 Competition Area for Track Events

For the competition area for Track Events the following maximum gradients shall apply:

- 0.1% downward in the direction of running. Should the gradient of the sprint track as part of a Standard Track vary, the inclination is measured in a straight line between start and finish line for each event.
- 1.0% across the width of the track towards the inside lane. The transverse 1.0% gradient is primarily to ensure quick drainage of rainwater from the track surface. In very dry desert climates it might be appropriate for the track to be flat. To ensure that the gradient does not exceed the maximum allowable, it is strongly advised that the design gradient be made less than 1.0% to ensure that the maximum gradient is not exceeded.

2.1.3.2 Competition Area for Jumping Events

For the competition area for jumping events, the following maximum gradients shall apply:

- In the last 40m of the runway, 0.1% downward in the running direction for Long Jump, Triple Jump and Pole Vault. Should the gradient of the competition area as part of a Standard Track vary, the inclination is measured in a straight line between start of the runway and take-off line.
- In the last 15m of the runway, 0.4% downward in the running direction for High Jump along any radius of the semicircular area centred midway between the uprights.
- 1.0% across the width of the runway for Long Jump, Triple Jump and Pole Vault.

2.1.3.3 Competition Area for Throwing Events

For the competition area for throwing events, the following maximum gradients shall apply:

- In the last 20m of the runway, 0.1% downward in the running direction for Javelin Throw. Should the gradient of the competition area as part of a Standard Track vary, the inclination is measured in a straight line between start of the runway and throwing arc.
- 1.0% across the width of the runway for Javelin Throw.
- 0.1% downward in the throwing direction for Shot Put, Discus Throw, Javelin Throw and Hammer Throw landing sectors. Gradient at each arc shall be determined to the lowest point on the arc.
- Circles for Shot Put, Discus Throw and Hammer Throw shall be approximately level.

2.1.4 ARRANGEMENT OF THE FACILITIES

When deciding upon the arrangement of facilities, consideration must be given to the necessary movement of athletes during competition. The routes between ancillary rooms and competition areas should be as short as possible and not interfere with events in progress. Since optimum arrangement is almost impossible for

competition, the use of facilities must be well planned to ensure the most practical and safe conduct of the competition.

In the same manner, entrances to and exits from the arena must be planned. One exit must be located immediately after the finish line in order to bring the athletes out of the arena to the Mixed Zone and post-competition activities. Entrances should be placed in the other corners of the arena and preferably at the starts of sprint events to facilitate the entry of the athletes to the arena and to accommodate the preparation of the sites for competition.

Provision must also be made for transport of competition equipment and implements, and athletes gear from start areas to post event control.

For the marathon and other events taking place mainly outside the stadium, a suitable connecting passage linking the track with the road course must be provided. The slope of the passage should not be too steep as this will affect the athletes particularly walkers. The passage should be wide enough to take the mass of athletes at the start of the marathon and road walk.

2.2 Facilities for Track Events

Track events include sprint, middle and long-distance, hurdle and steeplechase events. The direction of running is anti-clockwise. The 400m oval track usually forms the basis of a multi-sports arena. Its dimensions are, therefore, dependent on the requirements of other sports. When integrating the straight and the steeplechase into the oval track, deviations from Section 2.1.3 will arise in the longitudinal slopes in some areas.

Although there are a number of different layouts for the 400m oval track, it is IAAF's objective to create uniform criteria, not only with a view to improving the performance parameters necessary for equal opportunities for all athletes and for the suitability for competition but also to simplify the principles of construction, surveying and certification of facilities.

Experience has shown that the most suitable 400m oval tracks are constructed with bend radii of between 35m and 38m, with an optimum of 36.50m. IAAF recommends that all future tracks are constructed to the latter specification and this will be referred to as the "400m Standard Track".

For further details see 2.2.1 to 2.2.3. For details of other layouts for the 400m track, see 2.2.1.8.

2.2.1 THE 400M STANDARD TRACK

2.2.1.1 Layout of the 400m Standard Track (Figures 1.2.3a and 2.2.1.1a)

The 400m Standard Track has the advantages of a simple construction, straight and curved sections of almost equal length and uniform bends which are most suitable to the running rhythm of athletes. Furthermore, the area inside the track is large enough to accommodate all throwing events and also a standard football pitch (68m x 105m).

The 400m Standard Track comprises 2 semicircles, each with a radius of 36.50m, which are joined by two straights, each 84.39m in length (Figure 1.2.3a). This diagram indicates the inside edge of the track which must have a kerb, that should be coloured white, with a height of 0.05m to 0.065m and a width of 0.05m to 0.25m. The inner edge of the track is 398.116m in length (36.50m x 2 x π + 84.39m x 2) where π = 3.1416. This

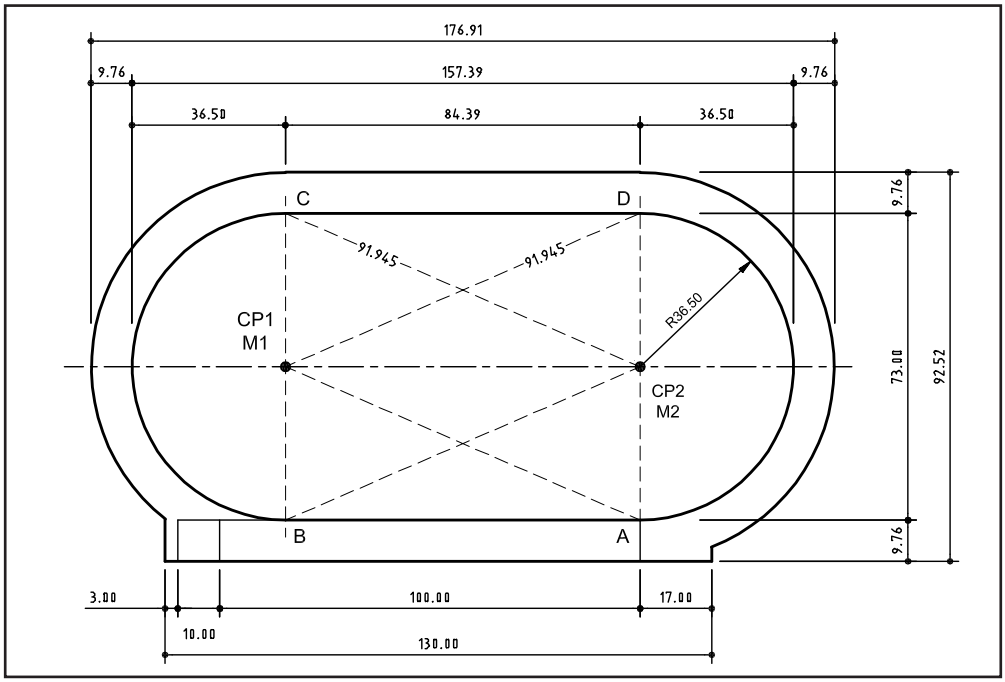

Figure 2.2.1.1a - Setting out plan and dimensions of the 400m Standard Track (Dimensions in m)

length for the inner edge gives a length of 400.001m (36.8m x 2 x π + 84.39m x 2) for the theoretical line of running (measurement line) at a distance of 0.30m from the kerb. The inside lane (lane 1) will, therefore, have a length of 400.001m along its theoretical line of running. The length of each of the other lanes is measured along a theoretical line of running 0.20m from the outer edge of the adjacent inside lane (Figure 2.2.1.1b). All lanes have a width of 1.22m ± 0.01m. The 400m Standard Track has 8, 6 or occasionally 4 lanes but the last is not used for international running competition.

On occasion in the World Cup in Athletics there are 9 teams requiring 9 oval lanes. This is the maximum number of oval lanes that should be provided at a facility as otherwise there is too much advantage gained by the athlete in the outside lane in a 200m race over the athlete in the inside lane. Further the outside lane could infringe the World Record rule that states the record should be made on a track, the radius of the outside lane of which shall not exceed 50m.

It is permissible to have any number of sprint lanes on the straights.

Setting out the 400m standard Track. Figure 2.2.1.1a

SETTING OUT PLAN AND DIMENSIONS OF THE 400M STANDARD TRACK (RADIUS 36.50M)

(Dimensions in m)

When determining the basic rectangle (A, B, C, D) with measuring tape and theodolite:

1. Distance between CP1 - CP2 resp. M1 - M2 using measuring tape:
   84.390m (± 0.002m)

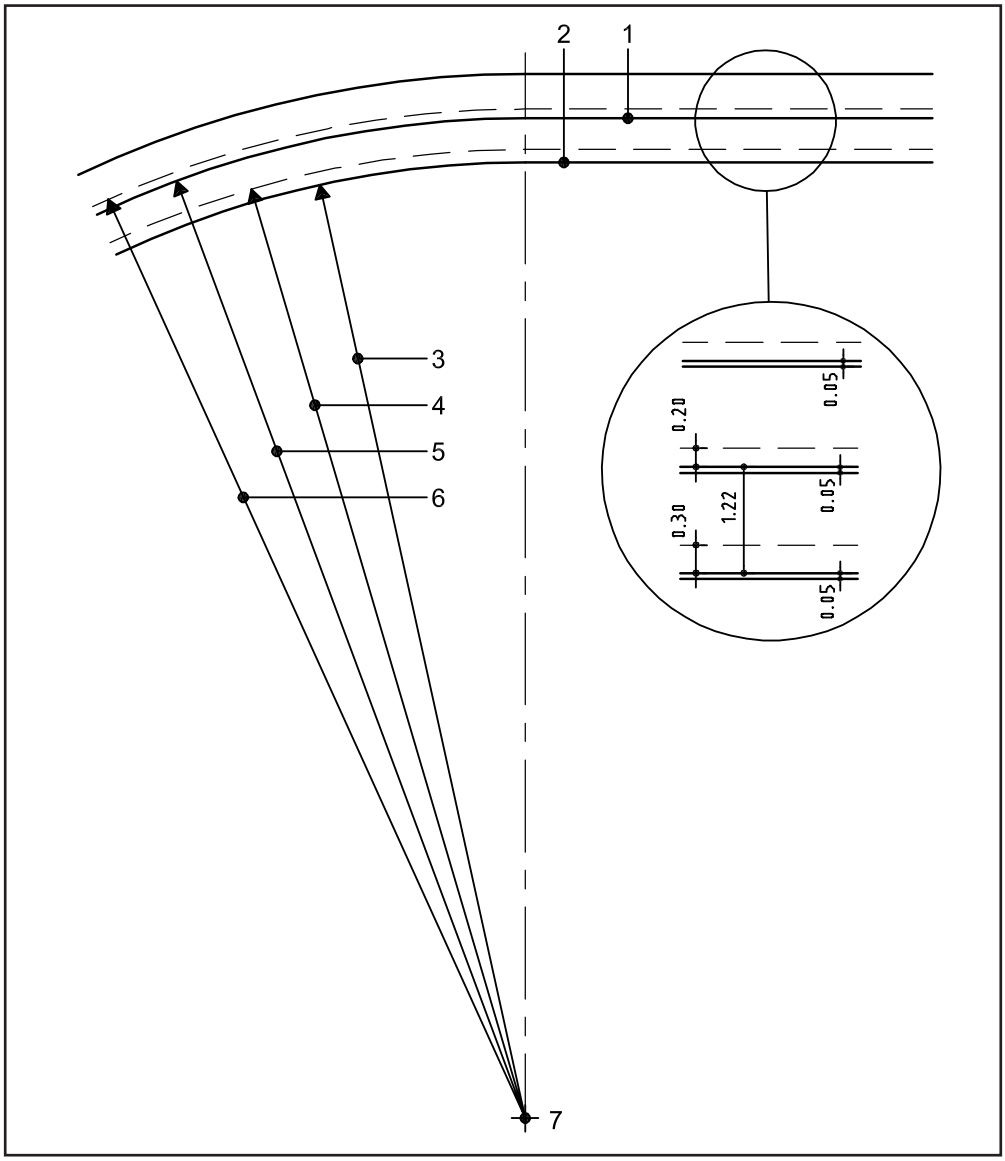

Figure 2.2.1.1b - Calculation of the track length of the 400m Standard Track (Dimensions in m)

1 Lane marking
2 Kerb
3 36.50m outside edge of kerb
4 36.80m line of running lane 1
5 37.72m outside edge of lane marking
6 37.92m line of running lane 2
7 Centre point semicircle

Length of the 400m Standard Track

2 straights of 84.39m each	= 168.780m
2 semicircle bends (line of running) of 36.80m x 3.1416 = 115.611m each	= 231.221m
Total	= 400.001m

2. Place one theodolite on each of CP1/M1 and CP2/M2:
   angle a = 25.9881 gon;
   CP1/M1 - A or D and CP2/M2 - B or C = 91.945m
3. A, B, C, D are in line with the inner track border.

When using tapes, the following points must be observed:

1. Standard steel measuring tapes only, with temperature equalisation table.
2. Immediately before and after measuring (position measuring tape with 50 N tensile load for 30m tapes and 100 N for 50m and 100m tapes) read temperature of measuring tape using a contact thermometer.*
3. Correct reading based on the temperature of the measuring tape and the temperature equalisation table.
4. In the absence of a temperature equalisation table: Calculate the change in length of the measuring tape caused by temperature using a reference temperature of 20°C as follows:
   Temperature of the measuring tape in degrees Celsius of the deviation from 20°C x length of the measuring distance in m x 0.0115mm.
5. If the temperature of the measuring tape is more than 20°C, subtract the change in length of the measuring tape calculated from the reading or alternatively add it on if the temperature is under 20°C.
6. Example:
   Temperature of measuring tape 15°C and measuring distance 36.50m;
   Change in measuring tape: 5 x 36.50 x 0.0115mm = 2.09mm;
   Increase reading of 36.500mm to 36.502mm.

Measurement of 400m Standard Track	
Length of the parallel straights	84.390m
Construction radius of the semicircle bend (including raised inner track border or outer edge of end markings of running track)	36.500m
Construction length of the semicircle bend (inside edge of the track)	114.668m
Measuring distance from the raised inner track border to the nominal measuring line (line of running) of the semicircle bend	0.300m
Radius for the nominal measuring length of the semicircle bend for raised track border	36.800m
Nominal measuring length (length of line of running) of the semicircle bend	115.611m
Nominal measuring length (length of line of running) of the oval track	400.001m
Construction length of the track border (inside edge of the track)	398.116m

** If an invar measuring tape (36% nickel content) is used, the temperature control may be dispensed with.*

2.2.1.2 Gradients of the 400m Standard Track

The kerb of the 400m Standard Track must be laid horizontally throughout. The lateral inclination of the track shall not exceed 1.0% inwards and the overall inclination

in the running direction shall not exceed 0.1% downwards. It is recommended that the design lateral inclination be slightly less than 1% to ensure that, because of construction inaccuracies, the 1% inclination is not exceeded. Local variations in inclinations are permitted on parts of the track.

2.2.1.3 Drainage of the 400m Standard Track

For drainage of the 400m Standard Track, see 3.5.

2.2.1.4 Dimensional Accuracy of the 400m Standard Track

The dimensional accuracy required for all classes of competition is deemed fulfilled if the following set values are attained in the "28 point control measurement" (Figure 2.2.1.4a) on the outside edge of the inner track border:

- 84.390m ± 0.005m for each of the two straights (2 readings)
- 36.500m ± 0.005m for 12 points per semicircle (including kerb) on the arc of the circle approximately 10.42m apart (24 readings)
- Alignment of the kerb in the area of the two straights: no deviations greater than 0.01m (2 readings). Ideally, the length of the kerb in the straight and the length of the outer lane measured along the outside edge of the lane should be equal.

The 28 point control measurement should be carried out and the readings recorded. The average of the deviations must not exceed + 0.040m nor be less than 0.000m (Table 2.2.1.4).

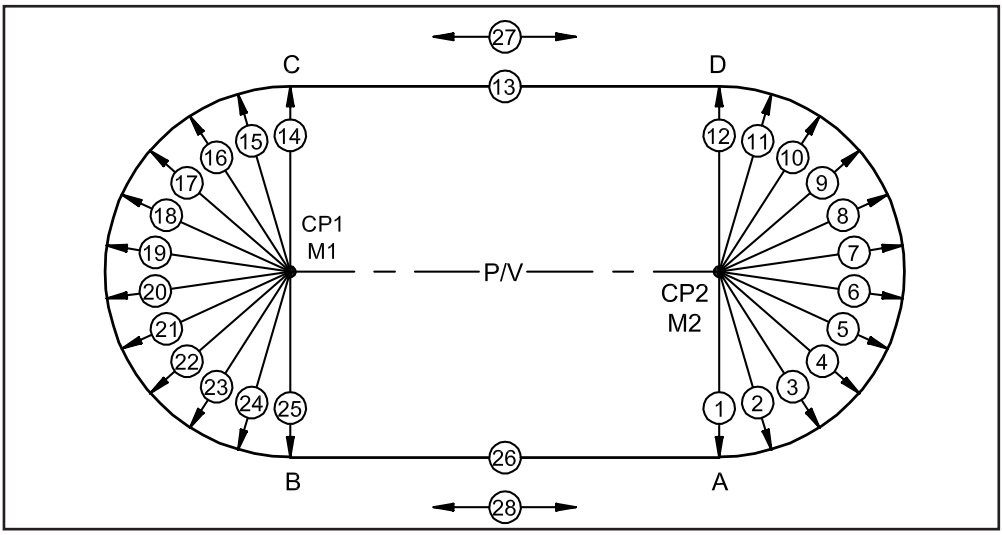

Figure 2.2.1.4a - 28 point control measurement of the 400m Standard Track

P/V = Prerequisite: Distance from the centres of the semicircles (CP/M): 84.39 ±0.005
Measurement 1-12 and 14-25: 36.50 resp. ±0.005
Measurement 13 and 26: 84.39 resp. ±0.005
Measurement 27 and 28: Alignment of the straights (permitted deviation of 0.010)
The readings ascertained for 1-12 and 14-25 must be equalised in the light of the record of 28 point control measurement. The track length calculated after equalisation may not be less than 400.000 or more than 400.040. (Dimensions in m)
Example of readings see in Table 2.2.1.4.

These control readings also form the basis of the layout of the kerb on whose dimensional accuracy the dimensional accuracy of all markings for the 400m Standard Track depends.

These control readings can also be used for other 400m oval tracks if the relevant measurements for the straights and radii are included (See 2.2.1.8).

For the construction of the arcs and for the 28-point control readings, the centres of the two semicircles must be marked by permanent non-corrodible metal tubes placed 84.39m apart.

Measurement in Accordance with Fig 2.2.1.4a Number	**Measuring Result m**	**Deviation from the Desired Value[1] ± mm**	**Calculation of the Running Length Based on Average Deviation m**		
1	36.502	+2			
2	36.503	+3			
3	36.502	+2			
4	36.501	+1			
5	36.499	−1			
6	36.497	−3			
7	36.500	±0			
8	36.501	+1			
9	36.505	+5			
10	36.502	+2			
11	36.500	±0			
12	36.500	±0			
Average of Measurements 1 to 12=		____ +12:12=+1	1. Semicircle 0.001 x 3.1416= +0.0031		
14	36.498	−2			
15	36.497	−3			
16	36.500	±0			
17	36.502	+2			
18	36.503	+3			
19	36.505	+5			
20	36.505	+5			
21	36.504	+4			
22	36.501	+1			
23	36.503	+3			
24	36.504	+4			
25	36.502	+2			
Average of Measurements 14 to 25 =		____ +24:12=+2	2. Semicircle 0.002 x 3.1416 = +0.0063	Deviation from the running length (in m)	
13	84.393	+3		1. Semicircle	+0.0031
26	84.393	+3		2. Semicircle	+0.0063
27	0.005	-		2 Straights	+0.0060
28	0.008	-			———
Total Deviation of Measurements 13 and 26 =		____ +6	2 Straights +0.006	Total Permitted max.	+0.0154 +0.040

[1] *Desired value for 1 to 12 and 14 to 25: 36.500*
Desired value for 13 and 26: 84.390
Desired value for 27 and 28: Alignment
Permitted deviation from desired value for 1 to 26: ± 0.005
Permitted deviation from alignment for 27 and 28: 0.01
Permitted tolerance of the running length: + 0.040 max. (in m)

Table 2.2.1.4 - Record of 28 point control measurement (Example with readings)

Tube diameter approximately 12mm, clear height above foundation 0.15m, foundation diameter min 0.20m, min 1.0m depth and constructed to prevent frost-heave, top edge 0.15m beneath the finished surface. Second tube with diameter of 0.04m to protect the "measuring tube" (Figure 2.2.1.4b).

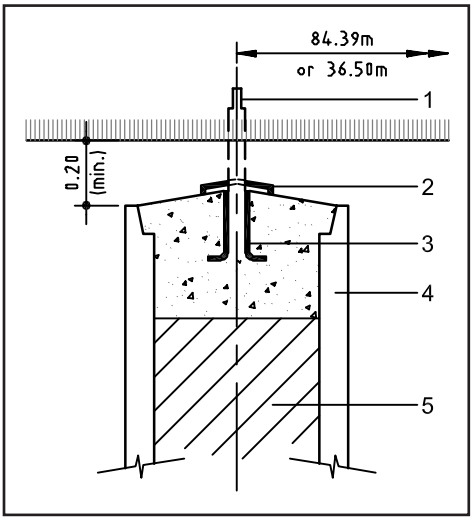

Figure 2.2.1.4b - Marking of centre of semicircle (Proposal for construction) (Dimensions in m)

1 Stainless steel bolt
2 Socket covered with stainless steel lid
3 Stainless steel socket inserted into mortar in exact vertical position
4 Steel tube in concrete foundation
5 Gravel sand

2.2.1.5 Safety of the 400m Standard Track

The 400m Standard Track must have an obstacle-free zone on the inside at least 1.00m wide and should have on the outside an obstacle-free zone at least 1.00m wide. Any drainage system positioned under the kerb must be flush with the surface and level with the track.

The outer obstacle-free zone must also be flush with the surface of the track.

2.2.1.6 Marking of the 400m Standard Track (Figure 2.2.1.6a)

All lanes shall be marked by white lines. The line on the right hand of each lane, in the direction of running, is included in the measurement of the width of each lane.

All start lines (except for curved start lines) and the finish line shall be marked at right angles to the lane lines.

Immediately before the finish line, the lanes may be marked with numbers with a minimum height of 0.50m.

All markings are 0.05m wide.

All distances are measured in a clockwise direction from the edge of the finish line nearer to the start to the edge of the start line farther from the finish.

The data for staggered starts for 400m Standard Track (constant lane width of 1.22m) is listed in Table 2.2.1.6a.

Distance on Line of Running	Marking Plan Area	Bends Run in Lanes	Lane 2	Lane 3	Lane 4	Lane 5	Lane 6	Lane 7	Lane 8
200	C	1	3.519	7.352	11.185	15.017	18.850	22.683	26.516
400	A	2	7.038	14.704	22.370	30.034	37.700	45.366	53.032
800	A	1	3.526	7.384	11.260	15.151	19.061	22.989	26.933
4x400	A	3	10.564	22.088	33.630	45.185	56.761	68.355	79.965

Table 2.2.1.6a - Staggered start data for the 400m Standard Track (in m)

All lanes and start lines shall be measured as indicated in 2.2.1.4. The deviation from the running length of all start lines must not exceed +0.0001xL nor be less than 0.000m where L is the length of the race in metres.

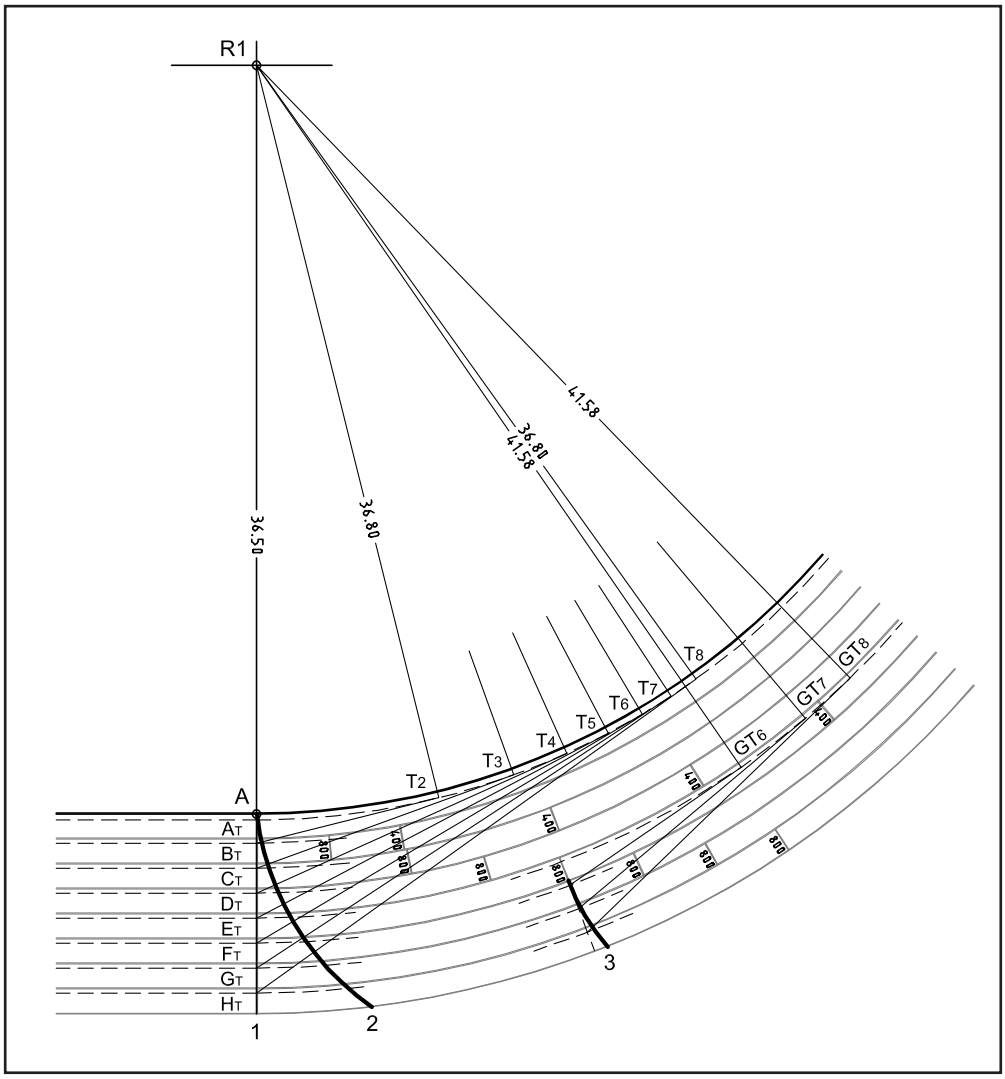

Figure 2.2.1.6b - Start and Group start marking for 2000m and 10,000m in the first bend (Dimensions in m)

R1 to A kerb line 36.50m
R1 to AT line of running 36.80m
R1 to BT line of running 36.80m + 1.12m
R1 to CT ... HT lines of running 37.92m + 1.22m each
T2 to T8 tangent points
GT6 to GT8 tangent points for group starts

1 Finish line
2 Start line 2000m and 10,000m
3 Start line group starts 2000m and 10,000m

Source: Swedish Athletic Federation

All track markings shall be in accordance with "IAAF 400m Standard Track Marking Plan" (Figure 2.2.1.6a attached to this Manual). Additional markings may be provided for national events provided they do not conflict with international markings. The IAAF markings and colour codes must be complied with for IAAF certification of Construction Category IV and above. If the colour of the track surface makes it difficult to distinguish any coloured marking IAAF approval should be obtained for an alternate colour.

In order to confirm that the camera is correctly aligned and to facilitate the reading of the photo finish, the intersection of the lane lines and the finish line shall be coloured black in a suitable design. Any such design must be solely confined to the intersection, for no more than 20mm beyond, and not be extended before, the leading edge of the finish line.

White lines, 30mm wide and 0.80m (0.40m at 2m) long, are marked 1m, 3m and 5m before the finish line (optional).

The essential requirement for all start lines, straight, staggered or curved, is that the distance for every athlete, when taking the shortest permitted route, shall be the same, and not less than the stipulated distance, i.e. no negative tolerance. For races of 800m or less, each athlete shall have a separate lane at the start. Races of up to, and including 400m shall be run entirely in lanes. Races of 800m shall start and continue in lanes (Figure 2.2.1.6b) until the end of the first bend. (Figure 2.2.1.6c and Table 2.2.1.6b).

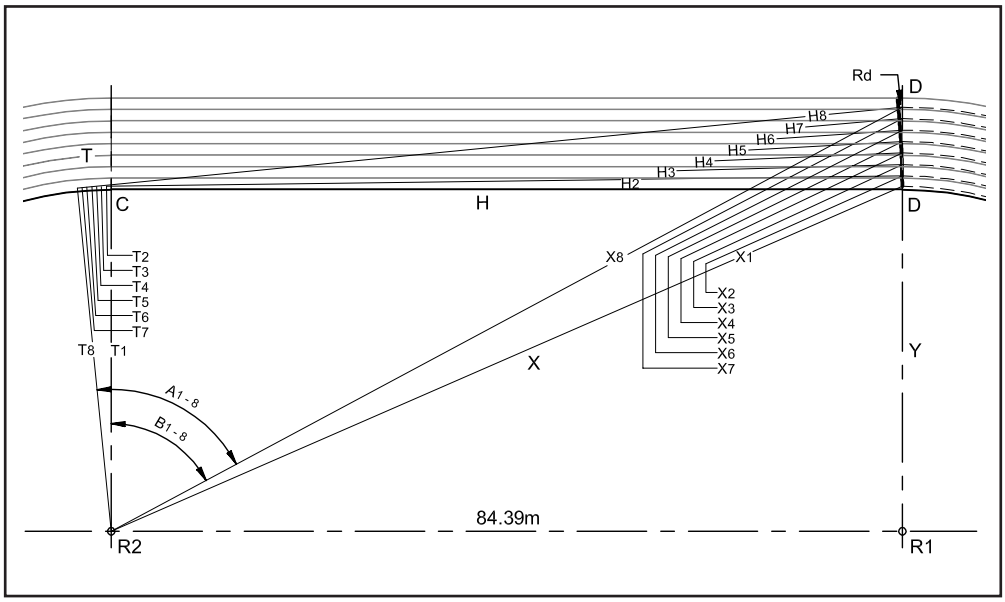

Figure 2.2.1.6c - Breakline marking for 800m races (see also Table 2.2.1.6b)

X distance R2 to D1/D8
Y distance R1 to D1/D8
H distance H2/H8 to T2/T8
T tangent points T2/T8
Rd deviation of breakline from D/D line
C and D points on the kerb of the track

Source: Swedish Athletic Federation

Lane	X R2 to D	Y R1 toD	Angle A	Angle B	A - B = Arc Angle	Arc Length	84.39 + Arc Length	Hypote-nuse H	Reduc-tion[1]
1	92.065	36.80	73.822	73.822	0.000	0.000	84.390	84.390	0.000
2	92.518	37.92	73.958	73.115	0.842	0.487	84.877	84.884	0.007
3	93.025	39.14	74.108	72.354	1.754	1.014	85.404	85.436	0.032
4	93.545	40.36	74.260	71.600	2.660	1.538	85.928	86.002	0.074
5	94.077	41.58	74.414	70.856	3.559	2.057	86.447	86.581	0.134
6	94.623	42.80	74.570	70.119	4.451	2.573	86.963	87.174	0.211
7	95.181	44.02	74.728	69.391	5.336	3.085	87.475	87.779	0.304
8	95.751	45.24	74.887	68.672	6.214	3.592	87.982	88.397	0.415

[1] *Not measured in the theoretical running line but in the H line!*

Table 2.2.1.6b - Calculation figures for breakline marking for 800m races for the 400m-Standard Track only (in m, angles in gon)

The exit from the first bend shall be marked distinctively with a 0.05m wide line (breakline) across the track to indicate when the athletes can break from their lanes. (Figure 2.2.1.6c). To assist athletes identify the breakline, small cones or prisms (0.05m x 0.05m) and no more than 0.15m high preferably of a different colour from the breakline and the lane lines shall be placed on the lane lines immediately before the intersection of each lane and the breakline. Races over 800m shall be run without lanes using a curved start line.

For the 1000m, 2000m, 3000m, 5000m and 10,000m, when there are more than 12 athletes in a race, they may be divided into two groups with one group of approximately 65% of the athletes on the regular arced start line and the other group on a separate arced start line marked across the outer half of the track. The other group shall run as far as the end of the first bend on the outer half of the track (Figures 2.2.1.6b and 2.2.1.6d).

The separate arced start line shall be marked in such a way that all the athletes shall run the same distance. A cone or other distinctive mark shall be placed on the inner line of the outer half of the track at the beginning of the following straight to indicate to the athletes of the outer group where they are permitted to join the athletes using the regular start line. For 2000m and 10,000m this point is at the intersection of the 800m break line and the inner line.

For the 4x400m Relay races, the echelon starting positions for the first athletes in each lane should be marked as shown in the IAAF 400m Standard Track Marking Plan.

The scratch lines of the first take-over zones are the same as the start lines for the 800m.

Each take-over zone shall be 20m long of which the scratch line is the centre.

The zones shall start and finish at the edges of the zone lines nearest the start line in the running direction.

The take-over zones for the second and last take-overs shall be marked 10m either side of the start / finish line.

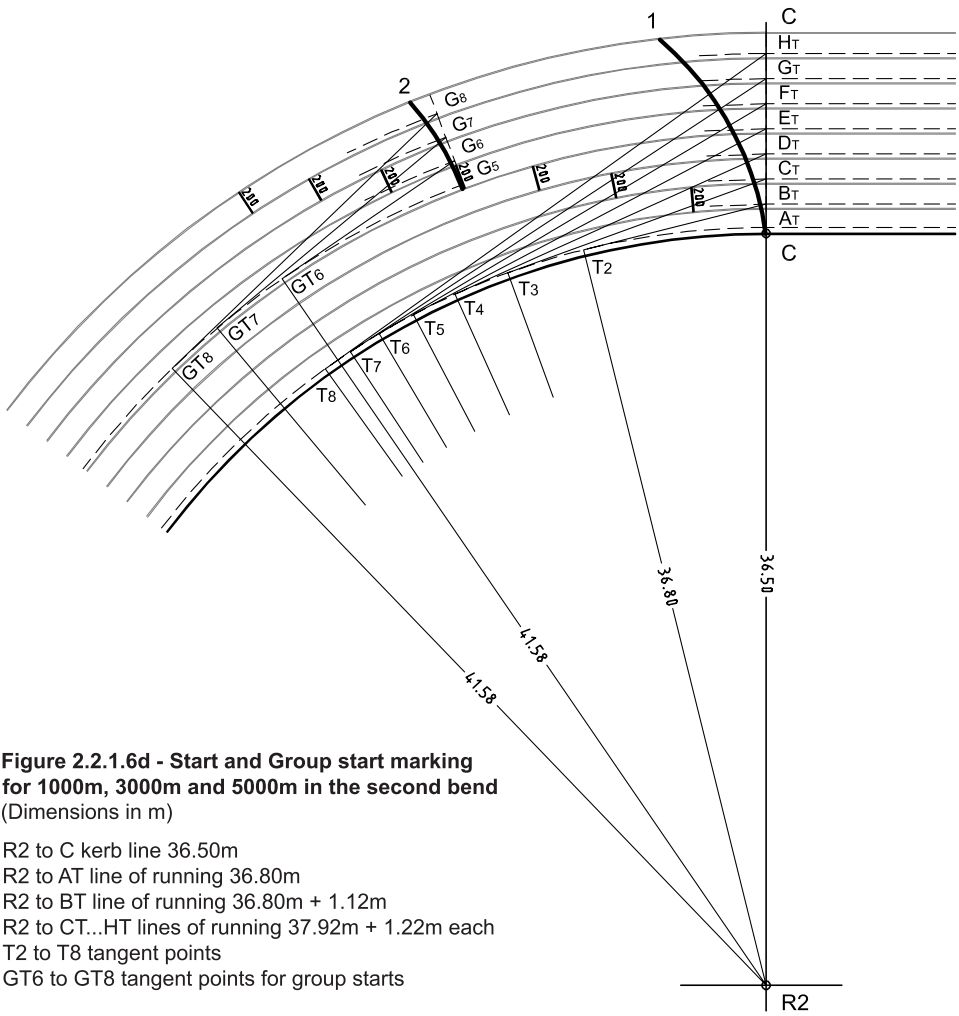

Figure 2.2.1.6d - Start and Group start marking for 1000m, 3000m and 5000m in the second bend
(Dimensions in m)

R2 to C kerb line 36.50m
R2 to AT line of running 36.80m
R2 to BT line of running 36.80m + 1.12m
R2 to CT...HT lines of running 37.92m + 1.22m each
T2 to T8 tangent points
GT6 to GT8 tangent points for group starts

1 Start line 1000m, 3000m, 5000m,
2 Start line group starts 1000m, 3000m, 5000m

Source: Swedish Athletic Federation

The arc across the track at the entry to the back straight showing the positions at which the second stage athletes are permitted to leave their respective lanes, shall be identical to the breakline arc for the 800m event.

2.2.1.7 Official Acceptance of the 400m Standard Track

All tracks to be used for IAAF competition must have a current IAAF Certificate. Such certificates will only be issued upon submission of full details including actual measurements. Standard forms of Facility Certification Application and Facility Measurement Report are available from the IAAF Office or may be downloaded from the IAAF website.

2.2.1.8 Other Layouts for the 400m Oval Track (Figure 1.2.3b to d and Table 1.2.3a)

Radii other than between 35.00m and 38.00m should not be used for tracks for international competition, except for double bend tracks where the dimensions of which ensures an infield size adequate for rugby. In this case, the minimum radius must not be less than 24.00m.

2.2.2 THE STRAIGHT AS A COMPONENT OF THE 400M STANDARD TRACK

2.2.2.1 Layout of the Straight Integrated within the 400m Standard Track (Figure 2.2.2.1).

The straight with a minimum of 6 lanes is integrated into the 400m oval track. As for all distances, it is measured from the edge of the finish line nearest to the start line backwards. The straight shall incorporate a starting area, 3m min., and run-out, 17m min. There is no maximum number of straight lanes on either straight.

2.2.2.2 Gradients of the Straight Integrated within the 400m Standard Track

The uniform radial inclination from the track kerb shall be 1% or less across the track and that inclination shall be continued to the outer extremities of any chutes.

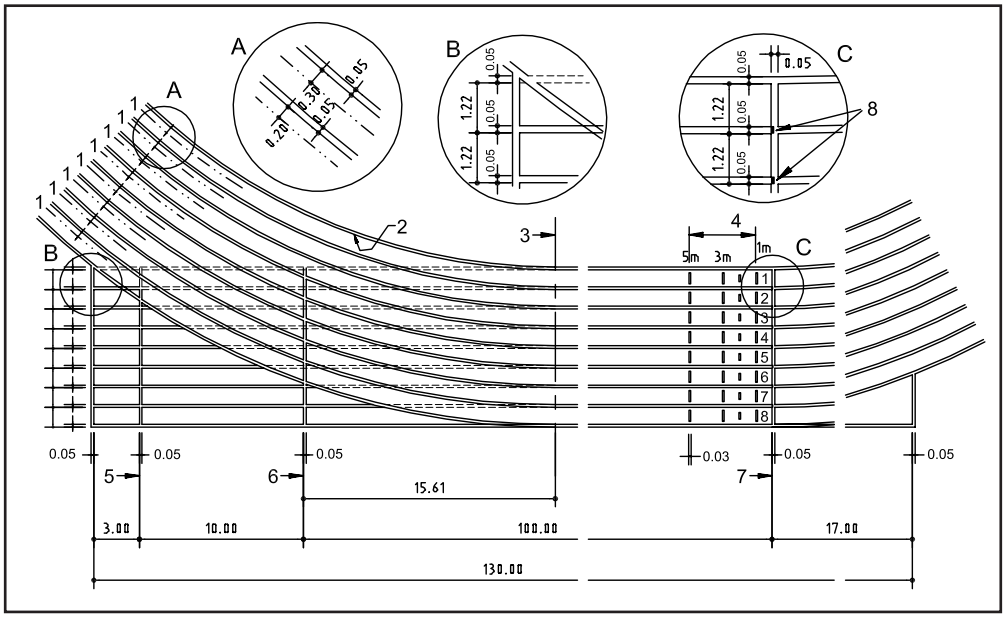

Figure 2.2.2.1 - Marking of the straight incorporated within the 400m Standard Track Layout Plan Kerb width min. 5cm (Dimensions in m)

1 Measurement line (line of running) for oval track
2 Inside edge of the track
3 Axis through semicircle centre
4 Distance determination lines (optional)
5 Start line for 110m
6 Start line for 100m
7 Finish line
8 Black rectangles 0.05mx0.02m max.

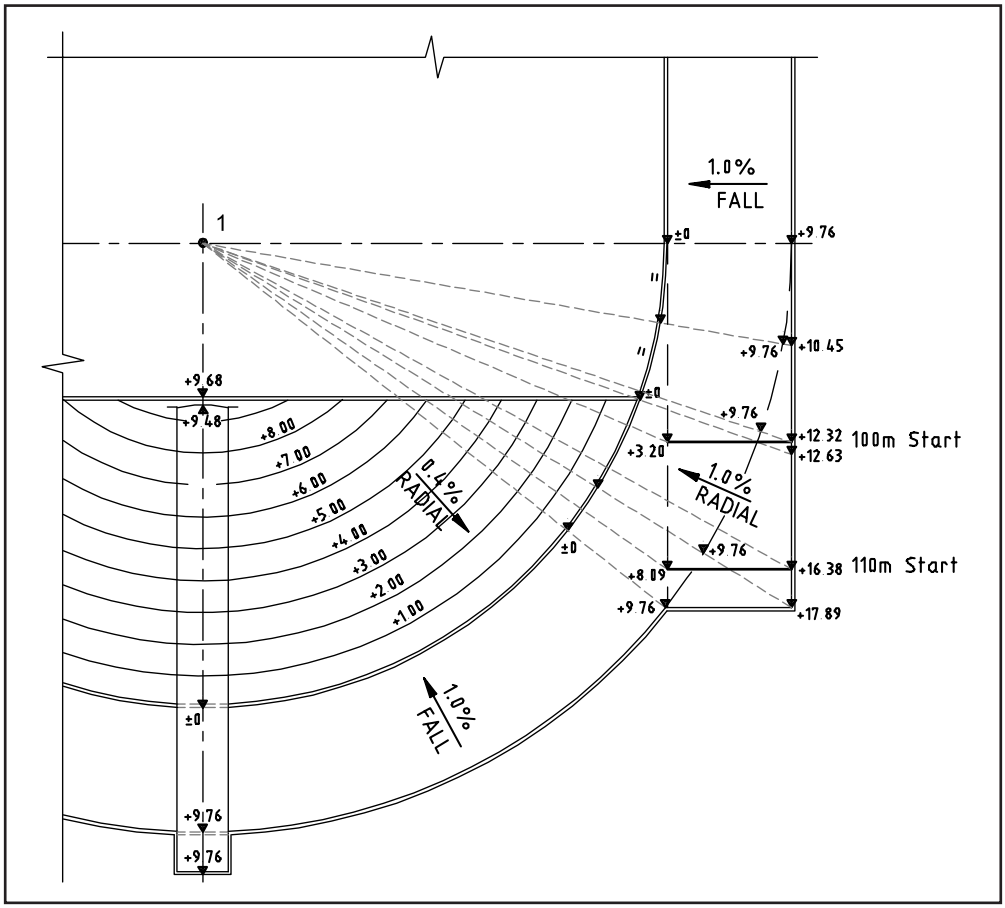

Figure 2.2.2.2 - Segment of the 400m Standard Track at the 100m / 110m start area with radial slope of 1.0% (Dimensions of heights in cm)

1 Centre of semicircle

The result is that the kerb at the outer edge of the chute parallel to the straight curves upwards at an increasing rate. Whilst the inclination on the outer lanes between the 110m and 100m starts exceeds 1 in 1000, the inclination from the 110m start to the finish line does not (Figure 2.2.2.2). Also the gradient between the 110m start and the tangent point is not straight but curved.

2.2.3 THE HURDLE RACE TRACK INTEGRATED WITHIN THE 400M STANDARD TRACK

2.2.3.1 Layout, Gradients and Marking of the Hurdle Race Track Integrated within the 400m Standard Track

The standard 400m track (2.2.1) and the sprint track with 100m and 110m (2.2.2) can be used for hurdle races. The hurdle positions shall be marked on the track by lines 100mm x 50mm so that the distances measured from the start to the edge of the line nearest the approaching athlete are in accordance with Table 2.2.3.1.

Event	Height of Hurdles[2]	Distance from Start Line to First Hurdles[3]	Distance between Hurdles[3]	Distance from Last Hurdles to Finish Line[3]	Number of Hurdles
110m Men	1.067	13.72	9.14	14.02	10
110m Junior Men	0.991	13.72	9.14	14.02	10
110m Youth Boys	0.914	13.72	9.14	14.02	10
100m Women / Junior	0.838	13.00	8.50	10.50	10
100m Youth Girls	0.762	13.00	8.50	10.50	10
400m Men / Junior	0.914	45.00	35.00	40.00	10
400m Youth Boys	0.838	45.00	35.00	40.00	10
400m Women / Junior / Youth	0.762	45.00	35.00	40.00	10

[1] The staggering of the hurdle positions in the outer lanes of the 400m Standard Track for 400m Hurdle races can be seen in Figure 2.2.1.6a
[2] ± 0.003
[3] ± 0.01 for 100m and 110m; ± 0.03 for 400m

Table 2.2.3.1 - Hurdle number, height and position[1] (in m)

The hurdles shall be placed so that the edge of the bar nearest the approaching athlete coincides with the edge of the track marking nearest the athlete.

2.2.4 THE STEEPLECHASE TRACK INTEGRATED WITHIN THE 400M STANDARD TRACK

2.2.4.1 Layout of the Steeplechase Track Integrated within the 400m Standard Track

The steeplechase track is integrated into the 400m Standard Track.

For the steeplechase track, a total of 5 hurdles is required, if possible at equal distances apart. One of the hurdles forms part of the water jump.

The water jump (3.66m x 3.66m x 0.50 to 0.70m - Figure 2.2.4.1c) is permanently installed inside the Standard Track in the 2nd segment (Figures 2.2.4.1a and 2.2.4.1d) or outside the Standard Track outside the 2nd bend (Figures 2.2.4.1b and 2.2.4.1e). The water jump track inside the segment is connected to the main track by a transitional arc (radius 16.00m), and the water jump outside the segment by a transitional straight (9.86m) followed by a transitional arc (radius 36.5m). If the water jump bend is located inside the track, the kerb of the Standard Track must be removable at the beginning and end of the water jump bend.

If the steeplechase track inside the bend is not bordered by a fixed kerb, it must be marked by a white line. Measurement of the track must be taken from a theoretical distance of 0.20m outward from this line. The same applies to the running line for water jumps outside the segment. The theoretical running line for the steeplechase track is 3.916m shorter in the segment containing the water jump than along the adjacent Standard Track (Figure 2.2.4.1a), for example the length of the steeplechase lap with the water jump inside the segment is 396.084m.

The theoretical running line for the steeplechase track outside the segment is 19.407m longer than along the adjacent Standard Track (Figure 2.2.4.1b), giving a steeplechase lap with the water jump outside the segment of 419.407m. For a 9-lane

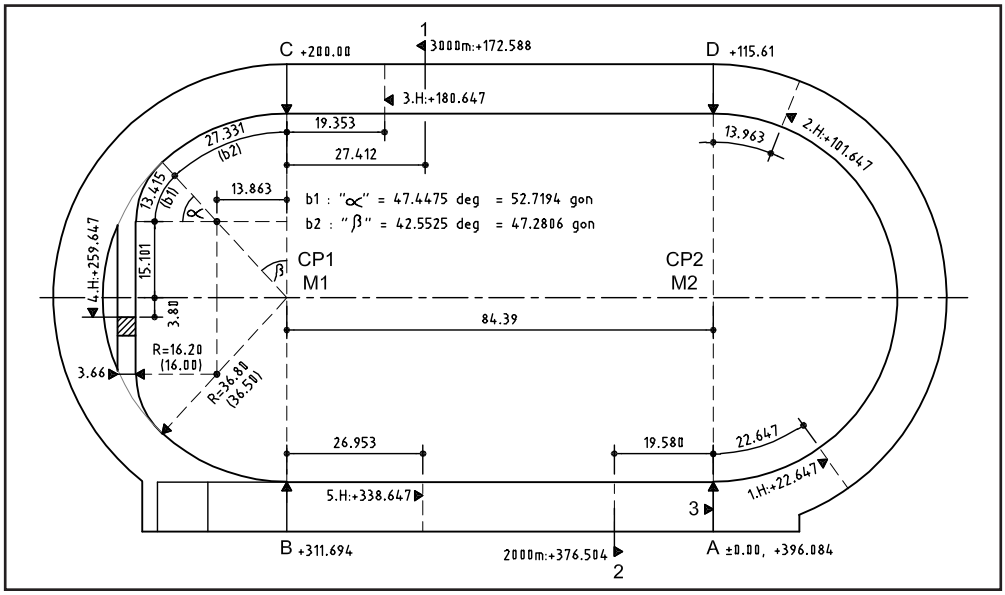

Figure 2.2.4.1a - Steeplechase track with water jump inside the bend of the 400m Standard Track (without fixed kerb) (Dimensions in m)

1 Start for 3000m: +172.588
2 Start for 2000m: +376.504
3 Finish line, also start and finish of steeplechase lap A ±0.00 and + 396.084

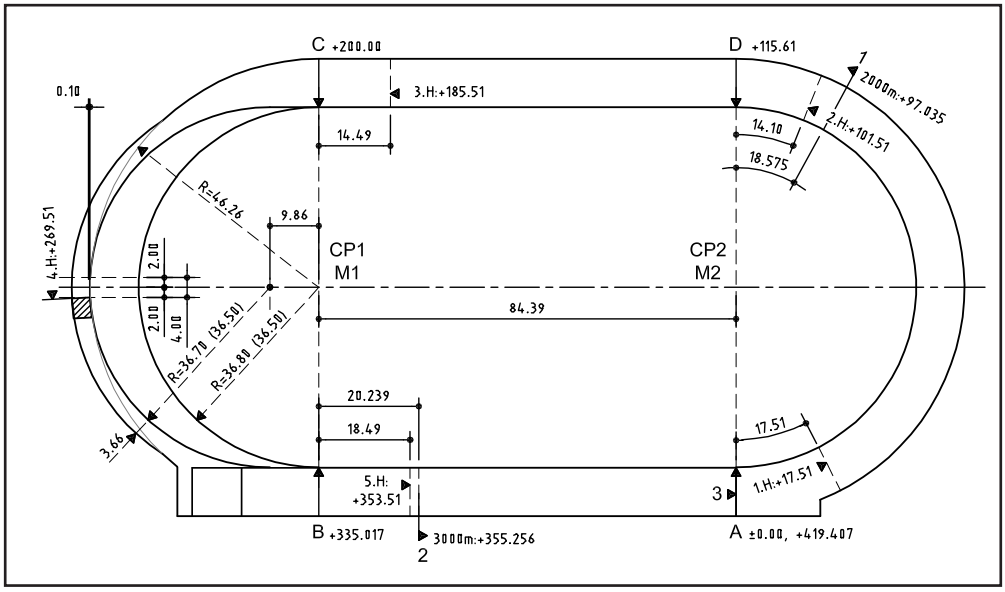

Figure 2.2.4.1b - Steeplechase track with water jump outside the bend of the 400m Standard Track (without fixed kerb) (Dimensions in m)

1 Start for 2000m: +97.035m
2 Start for 3000m: +355.256m
3 Finish line, also start and finish of steeplechase lap A ±0.00 and +419.407

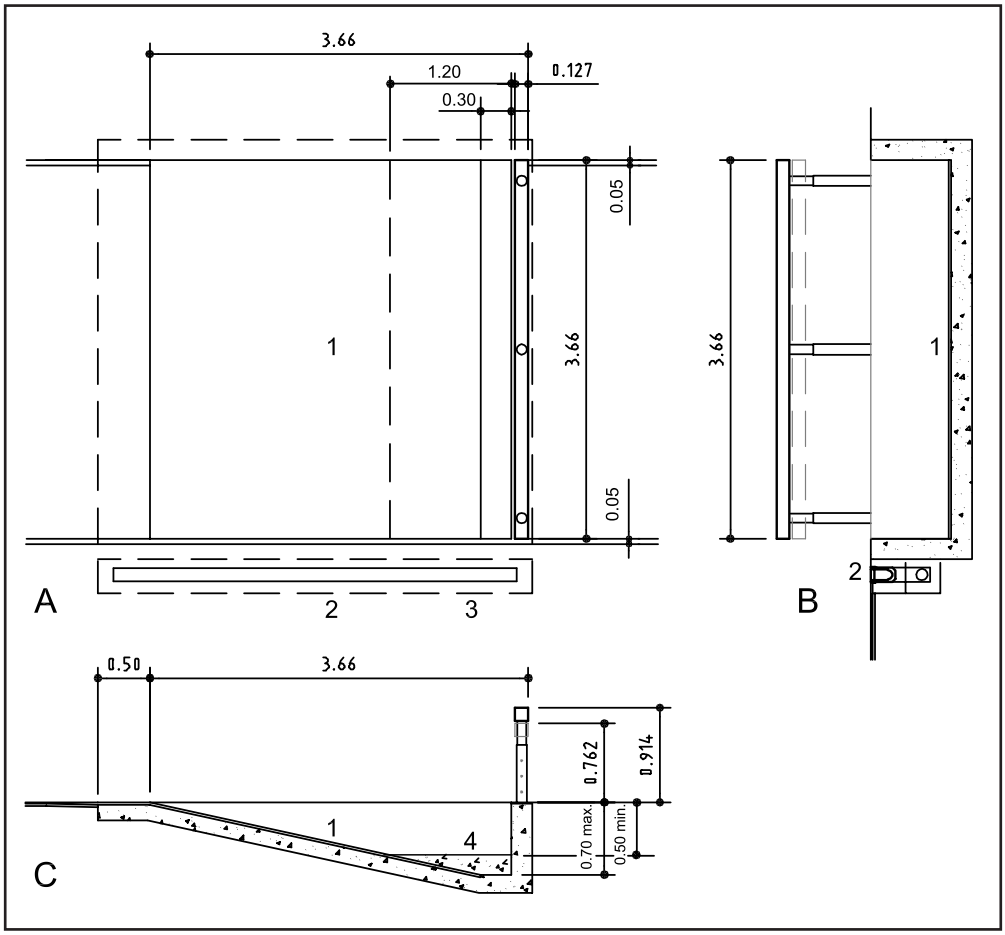

Figure 2.2.4.1c - Water jump for steeplechase track (Dimensions in m)

A Layout plan
B Cross section
C Longitudinal section

1 Synthetic surface, 25mm
2 Drainage gutter
3 Closable drain
4 Optional concrete infill for existing water jumps

oval track, an inside water jump is preferred, however if the water jump is outside, much greater care is needed in the design so that the distance from the finish line to the first hurdle is not be less than 12m, the distance from the 5th hurdle to the finish line is not less than 40m and the distance from the start line to the 1st barrier to be jumped is not less than 70m.

The top of the water jump pit shall be level with a concrete and/or synthetic surface finish but without any cut-outs or niches so that a painted white line can define the inside edge of the pit. The crossfall of the adjoining synthetic shall be warped so as to provide a smooth transition.

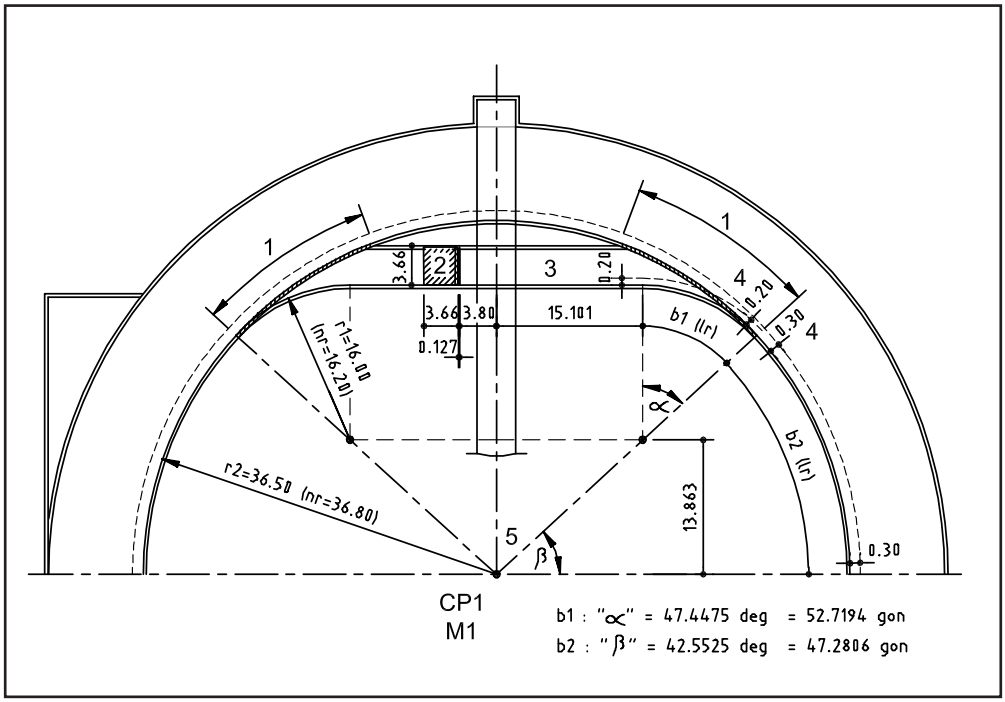

Figure 2.2.4.1d - Water jump on inside bend (Dimensions in m)

The length of running of the water jump bend is 3.916m shorter than the bend of the semicircle

$$b = r \times \pi \times \frac{\alpha°}{180°}$$

(For the calculation of the length of running of the steeplechase track in the segment: Distance between the line of running and the marking: 0.20m)

$$b1\ lr = 16.20 \times 3.1416 \times \frac{47.4475}{180} = 13.415m$$

$$b2\ lr = 36.80 \times 3.1416 \times \frac{42.5525}{180} = 27.331m$$

Straight = 2 x 15.101 = 30.202m
Length of running of water jump bend
2 x 13.415 + 2 x 27.331 + 2 x 15.101 = 111.694m
Length of running of semicircle bend
36.80 x 3.1416 = 115.611m
Transition bend with 16m radius

1 Removable track border, 2 water jump, 3 straight
4 Distance between line of running and track inside edge
5 Centre point semicircle

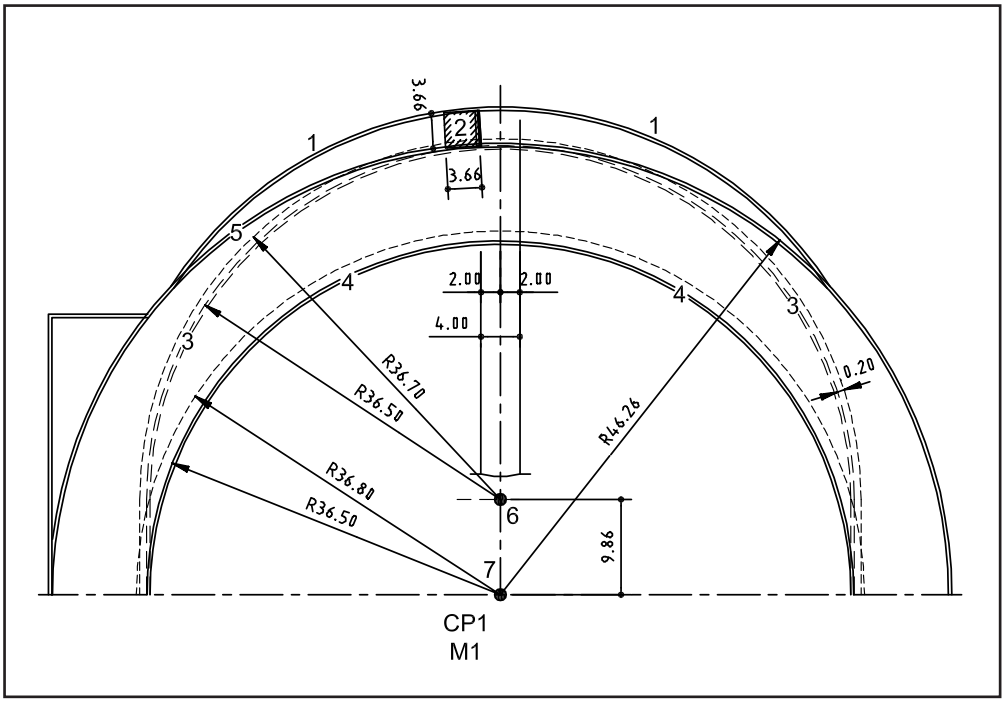

Figure 2.2.4.1e - Water jump outside the bend (Dimensions in m)

Distance of the line of running from the inner track marking: 0.20m (R = 36.70)
Length of the line of running of the water jump bend 19.407m longer than the semicircle bend of the Standard Track (115.611m)
Length of running : 9.86 x 2 + 36.7 x 3.1416 = 135.017m

1 Outer track border (flush mounted)
2 Water jump
3 Marking (track surface)
4 Inner track border (0.05m high)
5 Outer track border (flush mounted)
6 Centre point additional circle
7 Centre point semicircle

Comments on Figure 2.2.4.1a

STEEPLECHASE TRACK WITH WATER JUMP INSIDE THE BEND INTEGRATED INTO THE 400M STANDARD TRACK

(Dimensions in m)

1. Length of steeplechase lap measured along the line of running (from A to A) over the water jump on the inside bend:

Semicircle bend (R = 36.80m)	115.610m
2 straights of 84.390m each	168.780m
Water jump bend (middle straight 30.202m 2 transition bends b1 of 13.415m each 2 semicircle bend sections b2 of 27.331m each)	111.694m
	396.084m

2. Number of hurdles per steeplechase lap:
   5 (4 hurdles + 1 water jump)
   For 1st lap of the 2000m (1st and 2nd hurdles are not used)
3. Number of hurdles per steeplechase race:
   For 3000m: 35 (28 x hurdle + 7 x water jump)
   For 2000m: 23 (18 x hurdle + 5 x water jump)
4. Number of steeplechase laps (396.084m each) per steeplechase race:
   For 3000m: 7 laps with a total length of running of 2772.588m and prior to the start of the first full lap an additional stretch without hurdles of 227.412m
   For 2000m: 5 laps with a total length of running of 1980.420m and prior to the start of the first full lap an additional stretch without hurdles of 19.580m
5. Spacing of the hurdles along the line of running of the steeplechase lap
   5.1 Assumptions:
   Ideally, four equal spacings such that the fifth spacing is not more than 2.5m different from the other spacings, with the distance rounded to the nearest whole metre. Alternatively five equal spacings.
   5.2 Spacing calculated:
   396.084m: 5 = 79.2168m
   5.3 Spacing selected:
   4 x 79.00m (= 316.00m) + 1 x 80.094m (= total 396.084m)
6. Position of the start lines for 3000m and 2000m Steeplechase race along the steeplechase lap:
   6.1 Assumptions:
   Length of the steeplechase lap in compliance with No. 1 above; normal finish line; additional stretches in compliance with No. 4 above: 227.412m or 19.58m respectively.
   6.2 Position for 3000m:
   227.412m before the finish line, measured against the direction of running from the finish line along the normal track without water jump bend (84.390 + 115.610 + 27.412)
   6.3 Position for 2000m:
   19.580m before the finish line, measured against the direction of running from the finish line
7. Position of the hurdles along the steeplechase lap:
   7.1 Assumptions:
   Length of the steeplechase lap in compliance with No. 1 above; spacing of the hurdles in compliance with No. 5.3; fixed points: finish line and water jump
   7.2 Position of the 1st hurdle:
   237.00m (3 spacings of 79.00m each in compliance with No. 5.3) prior to the water jump, measured against the direction of running from the water jump along the line of running or 22.647m after the finish line in the direction of running
   7.3 Position of the 2nd hurdle:
   101.647m after the finish line (22.647m + 79.00m)
   7.4 Position of the 3rd hurdle:
   180.647m after the finish line (101.647m + 79.00m)
   7.5 Position of the 4th hurdle (water jump):
   259.647m after the finish line (180.647m + 79.00m)
   7.6 Position of the 5th hurdle:
   338.647m after the finish line (259.647m + 79.00m)

8. The positions of the hurdles are calculated along the line of running of the steeplechase lap and are each marked with their distance from the finish line in the direction of running. They are the same for both the 3000m and 2000m Steeplechase race.The hurdle positions must be marked on lane 1 and 3 in accordance with the IAAF Marking Plan.

Comments on Figure 2.2.4.1b

STEEPLECHASE TRACK WITH WATER JUMP OUTSIDE THE BEND INTEGRATED INTO THE 400M STANDARD TRACK

(Dimensions in m)

1. Length of steeplechase lap measured along the line of running (from A to A) via the water jump on the outside bend :

Semicircle bend (R = 36.80)	115.610m
2 straights of 84.390m each	168.780m
Water jump bend (R = 36.70m	
2 transition straights of 9.86m each)	135.017m
	419.407m

2. Number of hurdles per steeplechase lap:
   5 (4 hurdles + 1 water jump)
   For 1st lap of the 2000m only 3 hurdles (1st and 2nd hurdles are not used)
3. Number of hurdles per steeplechase race:
   For 3000m: 35 (28 x hurdle + 7 x water jump)
   For 2000m: 23 (18 x hurdle + 5 x water jump)
4. Number of steeplechase laps (419.407m each) per steeplechase race:
   For 3000m: 7 laps with a total length of running of 2935.849m and prior to the start of the first full lap an additional stretch without hurdles of 64.151m
   For 2000m: 4 laps with a total length of running of 1677.628m and before the start of the first full lap an additional stretch without hurdles 1 and 2 of 322.372m
5. Spacing of the hurdles along the line of running of the steeplechase lap
   5.1 Assumptions:
   Ideally, four equal spacings such that the fifth spacing is not more than 2.5m different from the other spacings, with the distance rounded to the nearest whole metre. Alternatively five equal spacings.
   5.2 Spacing calculated:
   419.407m : 5 = 83.8814m
   5.3 Spacing selected:
   4 x 84.00m (= 336.00m) + 1 x 83.407m (= total 419.407m)
6. Position of the start lines for 3000m and 2000m Steeplechase race along the steeplechase lap
   6.1 Assumptions:
   Length of the steeplechase lap in compliance with No. 1 above; fixed point: finish line; additional stretch in compliance with No. 4 above: 64.151m for 3000m (or first lap shortened by 97.035m for 2000m)
   6.2 Position for 3000m:
   64.151m before to the finish line, measured against the direction of running from the finish line along the line of running or 355.256m after the finish line in the direction of running over the water jump.

6.3 Position for 2000m:
97.035m after the finish line, measured in the direction of running from the finish line along the line of running over the water jump.

7. Position of the hurdles along the steeplechase lap
   7.1 Assumptions:
   Length of the steeplechase lap in compliance with No. 1 above; spacing of the hurdles in compliance with No. 5.3; fixed points: finish line and water jump.
   7.2 Position of the 1st hurdle:
   17.51m after the finish line in the direction of running (corresponds to 3 distances in compliance with No. 5.3) (3 x 84.0m = 252m) from the water jump against the direction of running
   7.3 Position of the 2nd hurdle:
   101.51m after the finish line in the direction of running (17.51m + 84.00m)
   7.4 Position of the 3rd hurdle:
   185.51m after the finish line in the direction of running (101.51m + 84.00m)
   7.5 Position of the 4th hurdle:
   269.51m after the finish line in the direction of running (185.51m + 84.00m)
   7.6 Position of the 5th hurdle:
   353.51m after the finish line in the direction of running (269.51m + 84.00m)
   7.7 Control Measurement up to 1st hurdle:
   353.51m + 83.407m = 436.917m - 17.51m = 419.407m
8. The Positions of the hurdles are calculated along the line of running of the steeplechase lap and are each marked with their distance from the finish line in the direction of running. They are the same for both the 3000m and 2000m steeplechase race. The hurdle positions must be marked on lane 1 and 3 in accordance with the IAAF Marking Plan.
9. 9-lane oval track: the distance from the finish line to the first barrier should not be less than 12m. The distance from the 5th barrier to the finish line should not be less than 40m. The distance from the start line to the 1st barrier to be jumped should not be less than 70m.

2.2.4.2. Safety of the Steeplechase Track Integrated within the 400m Standard Track

When not in use, the water jump should be completely covered level with the surrounding surface.

2.2.4.3 Marking for the Steeplechase Track Integrated within the 400m Standard Track

For the marking, apply Section 2.2.1.6 analogously. The position of the starting lines and the hurdles depends on the position of the water jump. This is shown in Figures 2.2.4.1a, 2.2.4.1b, 2.2.4.1d and 2.2.4.1e. The dimensions given apply to the running line of the respective steeplechase laps. The positions of the hurdles should be marked as shown on the Marking Plan in lanes 1 and 3.

2.2.4.4 Suitability for Competition and Official Acceptance of the Steeplechase Track Integrated within the 400m Standard Track

The suitability for competition and official acceptance of the steeplechase track are established within the inspection of the 400m Standard Track.

2.3 Facilities for Jumping Events

The Jumping events are Long Jump, Triple Jump, High Jump and Pole Vault. The facilities required for these are described in Section 2.1.1.2. Further details are given in Sections 2.3.1 to 2.3.4. These facilities preferably should not be on the infield because of the potential safety and event scheduling problems.

2.3.1 FACILITY FOR LONG JUMP (See 2.1.1.2)

2.3.1.1 Layout of the Facility for the Long Jump (Figures 2.3.1.1a and b)

The Long Jump facility includes a runway, a take-off board and a landing area. Usually, it is placed outside the track along one of the straights with two adjacent runways with a landing area at each end, thus allowing competition in either direction by two groups of athletes simultaneously. This is mandatory for Construction Classes I and II.

2.3.1.2 Runway for the Long Jump (Figures 2.3.1.1a and b)

The length provided for the runway shall be 40m min. and is measured from the beginning of the runway to the take-off line. The runway shall be 1.22m ± 0.01m wide. It shall be marked by white lines 0.05m wide or broken lines 0.05m wide, 0.10m long and 0.50m apart. The runway is usually covered with the same surface as the track.

2.3.1.3 Take-off Board for the Long Jump (Figure 2.3.1.1a and Chapter 6)

The take-off board shall be rectangular and shall measure 1.22m ± 0.01m long, 0.20m ± 0.002m wide and not more than 0.10m deep. It shall be coloured white. The surface of the take-off board must be flush with the surface of the runway.

In the case of a runway with a permanent surface, this requires a built-in installation tray made of corrosion-protected metal in which the take-off board can be correctly positioned. During sport-free periods, the take-off board can be removed. If it has a track surface on its reverse side, it can be turned over and used as part of the runway. This makes it possible to combine Long and Triple Jump with two or three take-off boards (which can be used on both sides) on a Triple Jump runway.

(For the take-off board itself, see also Chapter 6.)

2.3.1.4 Landing Area for the Long Jump (Figure 2.3.1.1a)

The landing area must be 7m to 9m long depending on the distance between its nearer end and the take-off line and shall be 2.75m min. wide. Generally, a landing area length of 8m placed 2m from the take-off line is recommended. The landing area shall, if possible, be so placed that the middle of the runway coincides with the middle of the landing area. If two landing areas are situated parallel side by side, the distance between them must be at least 0.30m. If two landing areas are staggered, the separation between the two areas must also be at least 0.30m (Figure 2.3.1.1b).

The landing area should have a border not less than 0.05m wide and 0.30m high, rounded off towards the inside (e.g. wooden plank or concrete border with soft covering) and level with the ground.

The landing area must have a water permeable substructure or a suitable drainage system (draining well or canal connection) and be filled with sand to a depth of not less than 0.30m at the edges and slightly deeper at the centre.

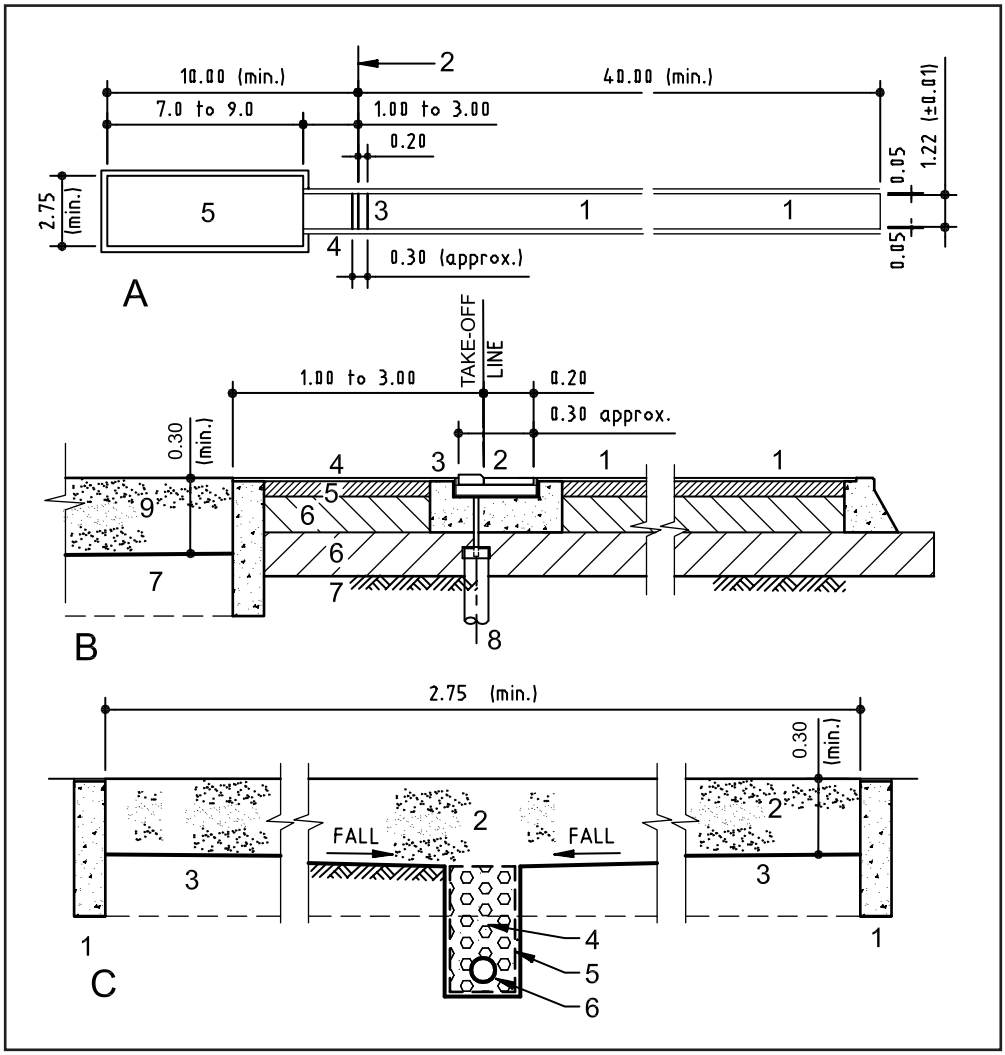

Figure 2.3.1.1a - Facility for the Long Jump (Dimensions in m)

A Layout plan
1 Runway 40m (min.)
2 Take-off line
3 Take-off board
4 Built-in tray
5 Landing area

B Longitudinal section of built-in tray for take-off board
1 Runway
2 Removable take-off board with adjustable legs
3 Built-in tray
4 Synthetic surface
5 Asphaltic concrete layer
6 Gravel base layer
7 Subgrade
8 Tray drainage
9 Landing area

C Cross section of landing area
1 Pit edge
2 Washed river sand 0 to 2mm graining, no organic components, max. 5% of weight up to 0.20mm
3 Subgrade
4 Drainage gravel
5 Geo fabric material
6 Subsoil drainage pipe

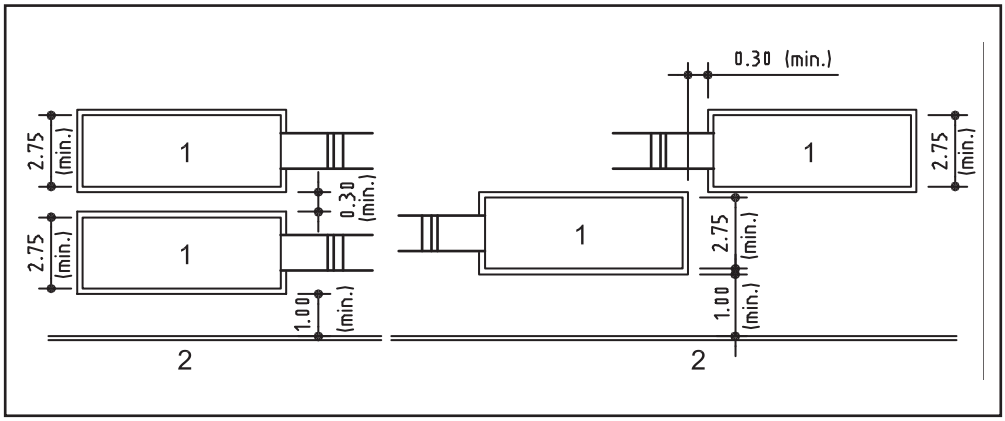

Figure 2.3.1.1b - Minimum distance of parallel situated Long and Triple Jump facilities
(Dimensions in m)

1 Landing area
2 Outer lane

The top edge of the border of the landing area, generally also dictates the level of the sand, which must be level with the take-off board. Tolerances: Landing area border level ± 0.02m compared with the highest part of the take-off board.

2.3.1.5 Safety of the Facility for the Long Jump

For the safety of the athletes, the sand must (to avoid hardening as a result of moisture) consist of washed river sand or pure quartz sand, without organic components, maximum 2mm granules, of which not more than 5% in weight is less than 0.2mm.

It is also important to ensure that the top edge of the board of the landing area is designed using flexible material and rounded off. Take-off boards installed permanently in synthetic runways are often the cause of accidents because the unevenness which necessarily occurs in the surface between them and the runway cannot be levelled out. This can be alleviated by using adjustable take-off boards placed in metal trays.

On all occasions, the overall distances between the take-off board and the far end of the landing area must be complied with.

The area beyond end of the landing area should be level and obstacle-free to allow athletes to run through the landing area.

If the horizontal jumps facilities are on the infield area, long throws should be scheduled not to clash with the use of the jump facilities for warm up and competition.

2.3.1.6 Suitability for Competition and Official Acceptance of the Facility for the Long Jump

Long Jump facilities must conform to the specifications. This can be established when inspecting the 400m Standard Track.

2.3.2 FACILITY FOR TRIPLE JUMP (See 2.1.1.2)

2.3.2.1 Layout of the Facility for the Triple Jump (Figure 2.3.2.1)

Except for the placement of the take-off board, the same facilities are used for Triple Jump as for Long Jump. For international competition, it is recommended that the take-off board shall be not less than 13m for men and 11m for women from the nearer end of the landing area. For other competitions, this distance shall be appropriate for the level of competition.

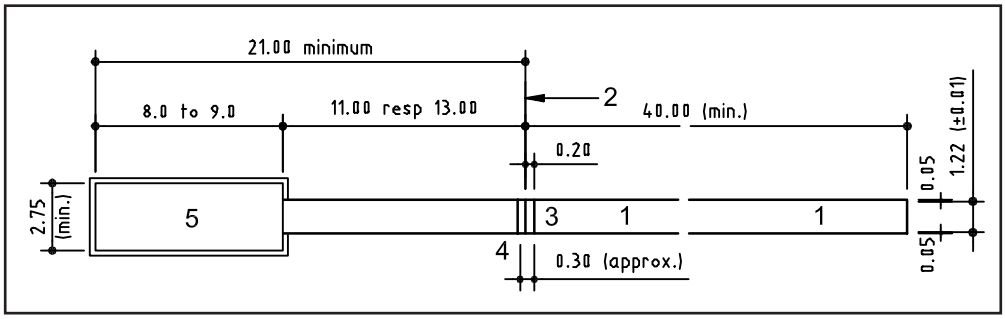

Figure 2.3.2.1 - Facility for the Triple Jump (Dimensions in m)

1 Runway 40m (min.)
2 Take-off line
3 Take-off board
4 Built-in tray
5 Landing area

2.3.2.2 Runway for the Triple Jump (Figure 2.3.2.1)

Section 2.3.1.2 also applies to the runway for the Triple Jump with the exception of the position of the take-off line.

2.3.2.3 Take-off Board for the Triple Jump (Figures 2.3.1.1a and Chapter 6)

Section 2.3.1.3 also applies to the take-off board for the Triple Jump. The integration of the Triple Jump into the facility for Long Jump requires a removable take-off board as described under Section 2.3.1.3. For Triple Jump, Sections 2.3.1.4 to 2.3.1.6 also apply.

2.3.3 FACILITY FOR HIGH JUMP (See 2.1.1.2)

2.3.3.1 Layout of the Facility for the High Jump (Figure 2.3.3.1)

The High Jump facility includes a semicircular runway, a take-off area, two uprights with cross bar and a landing area. By temporarily removing sections of the kerb, it is possible to use the oval track as part of the runway. For major championships, the High Jump facility must be large enough so that two High Jumps can be conducted simultaneously.

2.3.3.2 Runway for the High Jump (Figure 2.3.3.1)

The semicircular runway, with a radius of at least 20m, will permit approaches from every direction. If it is necessary to remove the kerb temporarily in order to be

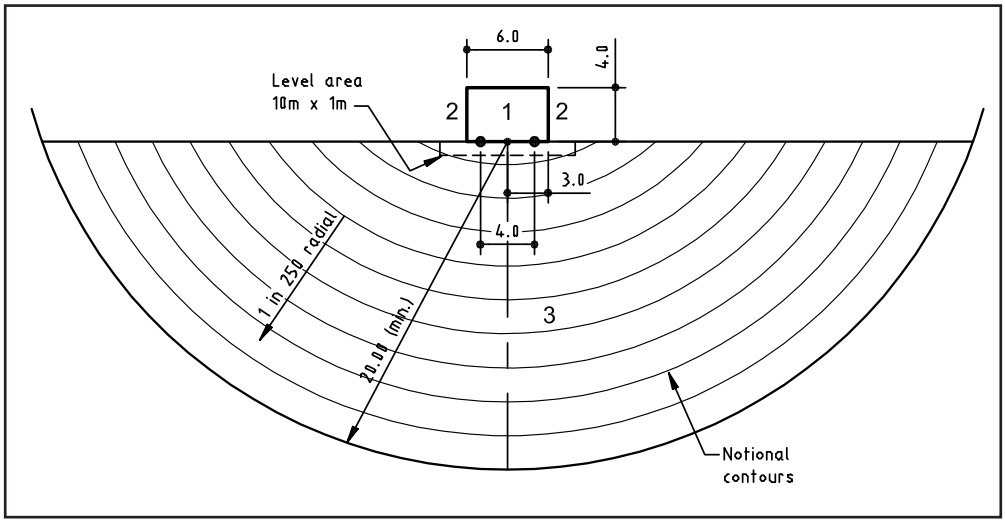

Figure 2.3.3.1 - Facility for the High Jump (Dimensions in m)

1 Landing mat
2 Uprights
3 Runway area

able to use the oval track as a runway, care must be taken to ensure that the heights of the surfaces of the oval track and the segment are the same along the track border. The runway and take-off areas are usually covered with the same surface as the track.

2.3.3.3 Uprights for the High Jump (See Chapter 6)

They must be installed 4.02m ± 0.02m apart.

2.3.3.4 Landing Mats for the High Jump (Figure 2.3.3.1 and Chapter 6)

The landing mats shall measure not less than 6.00m x 4.00m and shall be covered by a spike proof protective mat. The overall height shall be minimum 0.70 m. It may be placed on a 0.10m high grid which, on all sides shall be boarded to the ground with its front edge 0.10m behind that of the mat.

2.3.3.5 Safety of the Facility for the High Jump

Of particular importance for the safety of the High Jump is a suitable landing mat, which will allow both sufficient absorption of the impact energy from the fall of the athletes and gives adequate resilience when compressed. The condition of the landing mat must be regularly monitored.

If the oval track is included in the runway, a removable kerb is essential.

2.3.3.6 Suitability for Competition and Official Acceptance of the Facility for the High Jump

High Jump facilities must conform to the specifications. This can be established when inspecting the 400m Standard Track.

2.3.4 FACILITY FOR POLE VAULT (See 2.1.1.2)

2.3.4.1 Layout of the Facility for the Pole Vault (Figure 2.3.4.1)

The Pole Vault facility includes a runway, a box for inserting the pole, two uprights with crossbar and a landing area. It can be located either outside the track, parallel to one of the straights or within one of the segments. When located outside the track, it is usually constructed as a "symmetrical facility" with one landing area in the middle of two runways. When located within a segment, it is usually constructed with two parallel runways with positions for landing areas at each end.

For major championships (Construction Categories I and II), the Pole Vault facility must provide for two Pole Vaults to be conducted simultaneously in the same direction, preferably side by side and with same length of runway for each.

2.3.4.2 Runway for the Pole Vault with Box (Figure 2.3.4.1)

The length provided for the runway shall be 40m min. The runway is measured from beginning of the runway to the 0-line. The runway shall be 1.22m ± 0.01m wide. It shall be marked by white lines 0.05m wide or broken lines 0.05m wide with a length of 0.1m and a distance of 0.5m. At the end of the runway, the box must be mounted flush with the runway and installed such that the top inside edge of its end board lies on the 0-line and at the same height. The 0-line shall be marked by a white line, 0.01m wide which extends beyond the outside edges of the uprights.

The dimensions of the box must comply with Figure 2.3.4.1. For convenience, it should be fitted with a drainage pipe and a cover which is level with the ground.

The runway is usually covered with the same surface as the track.

2.3.4.3 Uprights for the Pole Vault (See Chapter 6)

The two uprights must be able to be installed on horizontal bases, level with the O-line, such that each can be moved from the 0-line not less than 0.80m towards the landing area (e.g. on a built-in double rail) or in fixed sockets with movable cross bar supports.

They must be not less than 5.20m apart with approximately 0.10m between each upright and the landing mat. The lower part of the uprights shall be covered with appropriate padding to protect the athletes and their poles. The landing mats shall be recessed to take the uprights and any horizontal bases. Separate protective pads shall be installed as necessary.

2.3.4.4 Landing Mats for the Pole Vault (See Chapter 6)

With the exception of the dimensions, Section 2.3.3.4 shall apply for the landing mats. For major international competitions, the landing area shall not be smaller than 6.00m long (excluding the front pieces) x 6.00m wide x 0.80m high. It may be placed on a 0.10m high grid. The front pieces must be at least 2m long. The sides of the landing area nearest to the box shall be placed 0.10m - 0.15m from the box and shall slope away from the box at an angle of approximately 45°. For other competitions, the landing area should measure not less than 5.00m long (excluding the front pieces) x 5.00m wide.

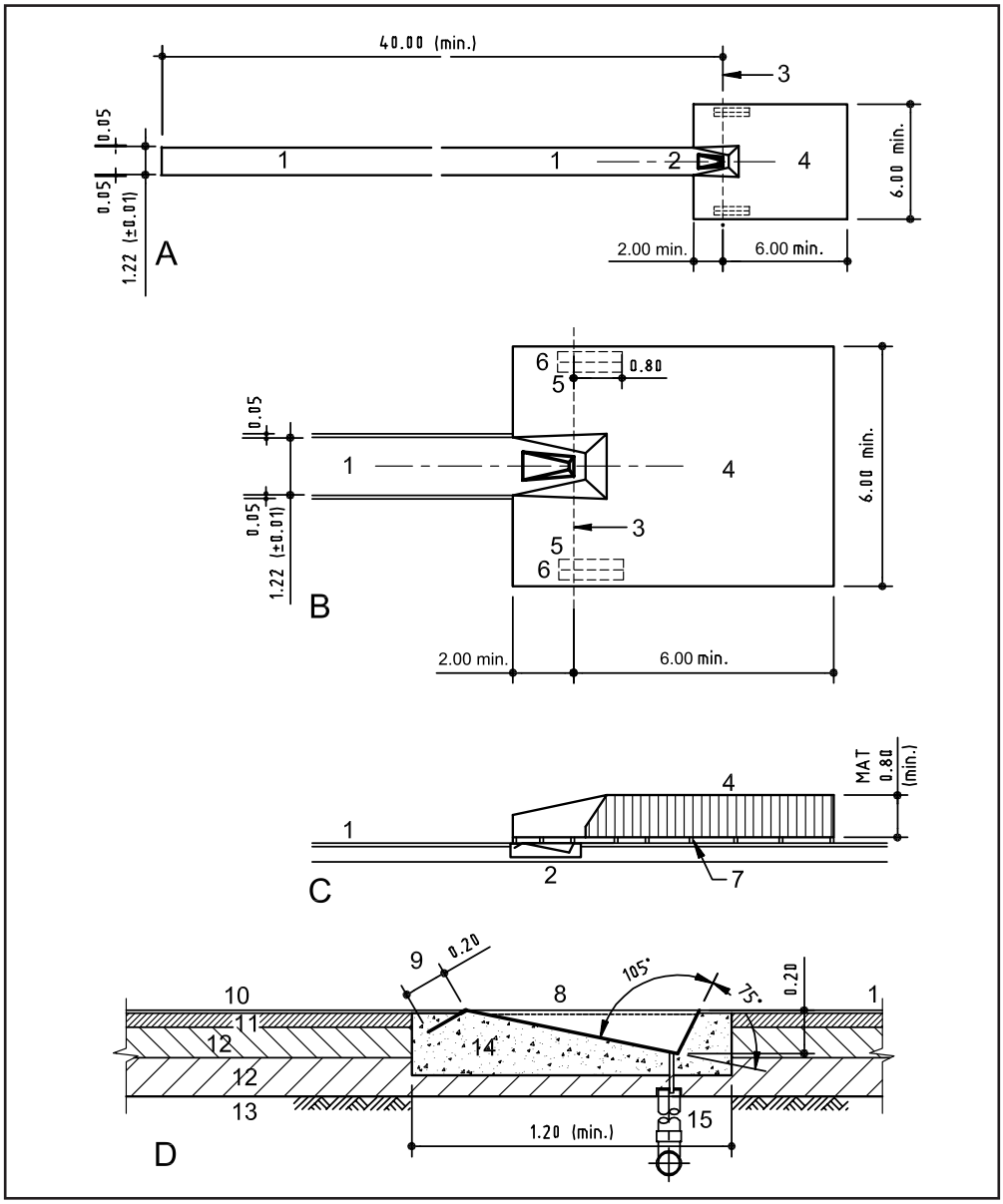

Figure 2.3.4.1 - Facility for the Pole Vault (Dimensions in m)

A Layout plan
B Detailed layout plan
C Longitudinal section
D Longitudinal section of the take-off box

1 Runway
2 Take-off box
3 0-line
4 Landing mat
5 Installation zone or ground sockets for uprights
6 Protective pad
7 Grid
8 Cover plate
9 Flange
10 Synthetic surface
11 Asphaltic concrete
12 Gravel base layer
13 Subgrade
14 Concrete
15 Drainage pipe

2.3.4.5 Safety of the Facility for Pole Vault

For the safety of the Pole Vault, Sections 2.3.3.4 and 2.3.3.5 relating to the landing mat shall apply. The uprights must be mounted such that they are not easily tilted. The Pole Vault box should have a cover which is level with the ground when not in use.

2.3.4.6 Suitability for Competition and Official Acceptance of the Facility for the Pole Vault

Pole Vault facilities must conform to the specifications. This can be established when inspecting the 400m Standard Track.

2.4 Facilities for Throwing Events

The throwing events are the Discus Throw, the Hammer Throw, the Javelin Throw and the Shot Put. The facilities required for these are described under Section 2.1.1.3. Further details are listed in the Sections 2.4.1 to 2.4.5.

2.4.1 FACILITY FOR DISCUS THROW (See 2.1.1.3)

2.4.1.1 Layout of the Facility for the Discus Throw (Figure 2.4.1.1)

The Discus Throw facility includes a throwing circle, a protective cage and a landing sector. Usually two facilities for Discus Throw are constructed within the arena so as to take advantage of wind conditions but this is not mandatory. They are located within the segments near the ends of the back straight. In each case, the landing sector is located in the grass area inside the track.

The facility for Discus Throw near the 1500m start is usually combined with a facility for Hammer Throw, the only difference being the diameter of the throwing circle is 2.50m for Discus Throw and 2.135m for Hammer Throw and the protective cage must meet the more stringent requirements for hammer throwing. If two separate Discus and Hammer circles are placed within the hammer protective cage then the Discus Throw circle should be the circle closer to the landing sector.

2.4.1.2 Throwing Circle for the Discus Throw (Figure 2.4.1.2)

The throwing circle shall be made of band iron, steel or other suitable material, the top of which shall be flush with the ground outside or the synthetic surface or concrete surround. The interior of the circle shall be constructed of concrete and must not be slippery.

The surface of the interior shall be level and 0.02m ± 0.006m lower than the upper edge of the rim of the circle. The inside diameter of the circle shall be 2.50m ± 0.005m. The rim of the circle shall be at least 6mm thick, 70mm to 80mm deep and painted white. The centre of the circle through which all performances are measured shall be marked. (This is best done using a brass tube with a 4mm inside diameter laid flush with the surface of the circle). In addition, at the edge of the throwing circle, three or more evenly distributed, non-corrodible drainage pipes (e.g. brass pipe with a 20mm diameter) should be laid flush with the surface of the circle and in such a way that they reach down to the water permeable substructure or can be connected to a drainage system.

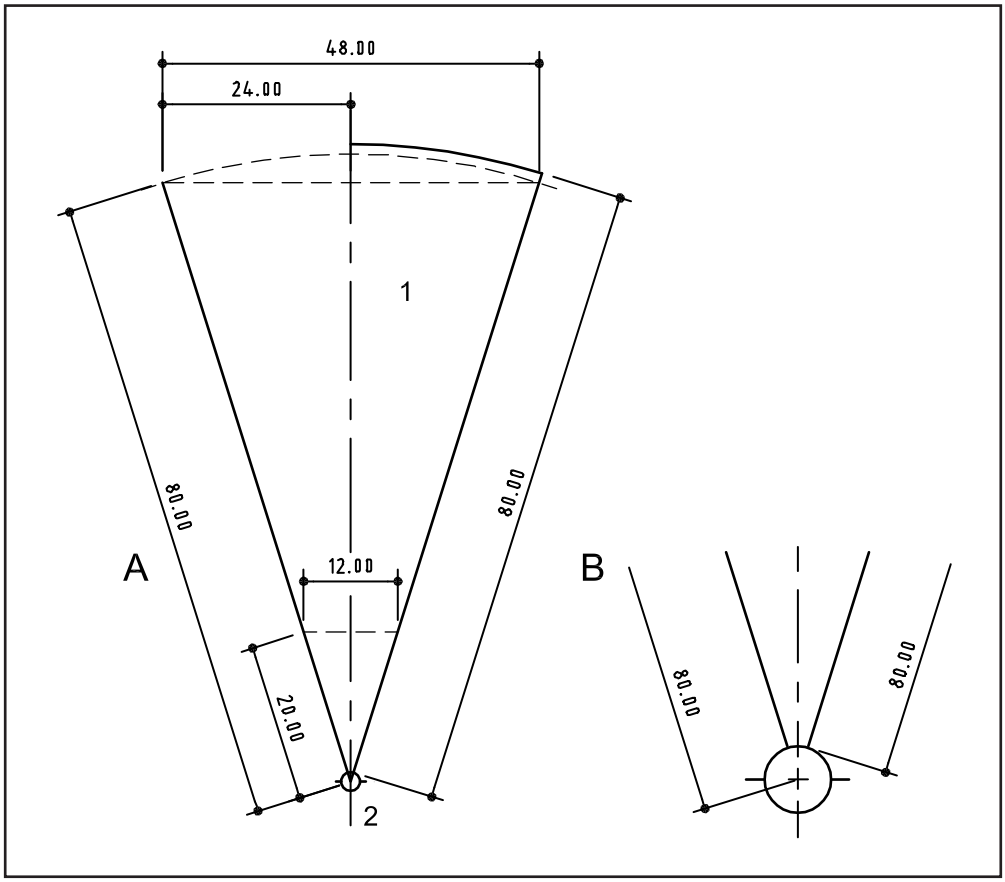

Figure 2.4.1.1 - Facility for the Discus Throw (Dimensions in m)

A Setting out plan
B Marking plan

1 Landing sector
2 Throwing circle

The throwing circle can be made of a minimum 0.15m thick welded wire mesh reinforced slab of 25MPa compressive strength concrete which lies on a frost-proof supporting layer. The throwing circle should be fixed when the concrete slab is laid. The circle rim must be radially braced so that the rim will not distort when the concrete is vibrated against it. The top surface of the concrete slab (= throwing area) must be finished with a smooth wood float for sufficient traction. For 1m^3 of 25MPa compressive strength concrete the following quantities are required: 300 kg of cement, 135 l of water and 1865 kg of 0-20mm natural coarse aggregate. This yields a raw concrete weight of 2300 kg/m^3. If a material other than concrete is used for the slab, its surface properties must be similar to those of concrete. A white line 0.05m wide and 0.75m min. long shall be marked on either side of the circle. The rear edge of the white line shall form a prolongation of a theoretical line through the centre of the circle at right angles to the centre line of the landing sector.

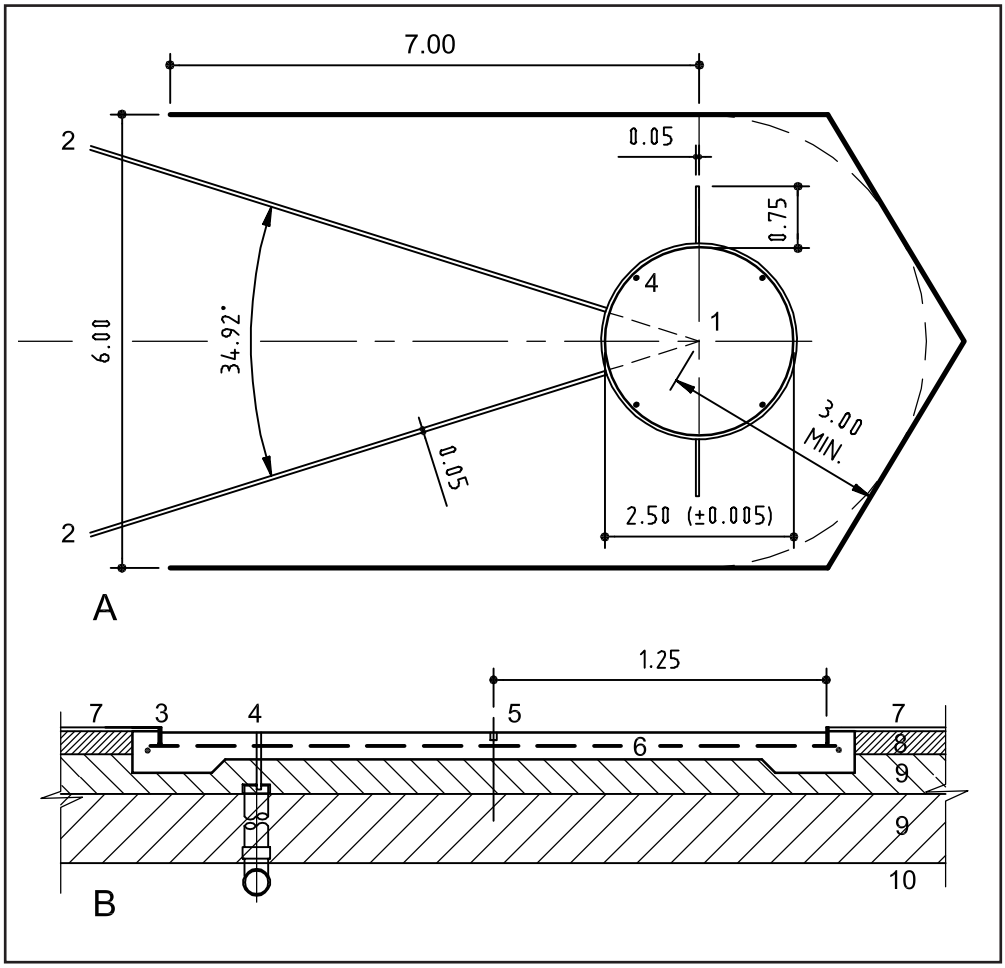

Figure 2.4.1.2 - Detail plan of throwing circle and cage siting for the Discus Throw
(Dimensions in m)

A Layout plan
B Section through throwing circle

1 Centre point (intersection point of setting out plan)
2 Marking for the landing sector
3 Circular metal rim
4 Drainage pipe
5 Centring hole 4mm diameter (brass tube)
6 Concrete base with reinforcing mesh
7 Synthetic surface
8 Asphaltic concrete
9 Gravel base layer
10 Subgrade

2.4.1.3 Safety Cage for the Discus Throw (Figure 2.4.1.2 and Chapter 6)

Frequently discus and hammer is thrown from a combined facility. Therefore in those instances the higher standards required for hammer throwing apply to the

protective cage design. To provide greater safety it may be desirable to extend the netting on the side of the cage nearer to the track further than 7m from the centre of the circle and/or increase the height of the netting for the last 2m.

2.4.1.4 Landing Sector for the Discus Throw (Figure 2.4.1.1)

The landing sector shall consist of cinders or grass or other suitable material with an even surface soft enough to ensure that the place of the initial fall of the implement can be clearly established by the judges. The landing surface may not allow the implement bounce backwards, thus creating a risk that the measuring point is obliterated.

The landing sector must be laid from the middle of the circle with an angle of 34.92 degrees and shall be marked by 0.05m wide white lines, the inside edges of which form the boundary of the sector. The length of the sector shall be 80m. Its angle of 34.92 degrees will be attained if the two sector lines at a distance of 80m are spaced 48m apart.

The maximum allowance for the overall downward inclination of the landing sector, in the throwing direction at any point, shall not exceed 0.1%.

2.4.1.5 Safety of the Facility for the Discus Throw

The layout and erection of the protective cage are especially important for the safety of the facility for Discus Throw. It is important to ensure the correct position of the axis of the landing sector in relation to the opening of the cage. For the safety of the facility for the Discus Throw, care must be taken to ensure that nobody enters the danger zone during the throw. Therefore additional fencing at least 1.00m outside the sector lines is recommended. This fence also arrests skidding implements. The protective cage must be checked before each competition to ensure correct assembly and condition.

The cage must be correctly operated throughout training, warm-up and competition.

2.4.1.6 Suitability for Competition and Official Acceptance of the Facility for the Discus Throw

Discus throw facilities must conform to the specifications. This can be established when inspecting the 400m Standard Track.

2.4.2 FACILITY FOR HAMMER THROW (See 2.1.1.3)

2.4.2.1 Layout of the Facility for the Hammer Throw (Figure 2.4.2.1)

The Hammer Throw facility includes a throwing circle, a protective cage and a landing sector. It is usually combined with the facility for Discus Throw. Section 2.4.1 applies.

2.4.2.2 Throwing Circle for the Hammer Throw (Figure 2.4.2.2)

For the throwing circle Section 2.4.1.2 shall apply in general with the following exceptions:

The diameter of the throwing circle is 2.135m ± 0.005m. For a combined facility for Discus and Hammer Throw, the diameter of the throwing circle is 2.50m ± 0.005m.

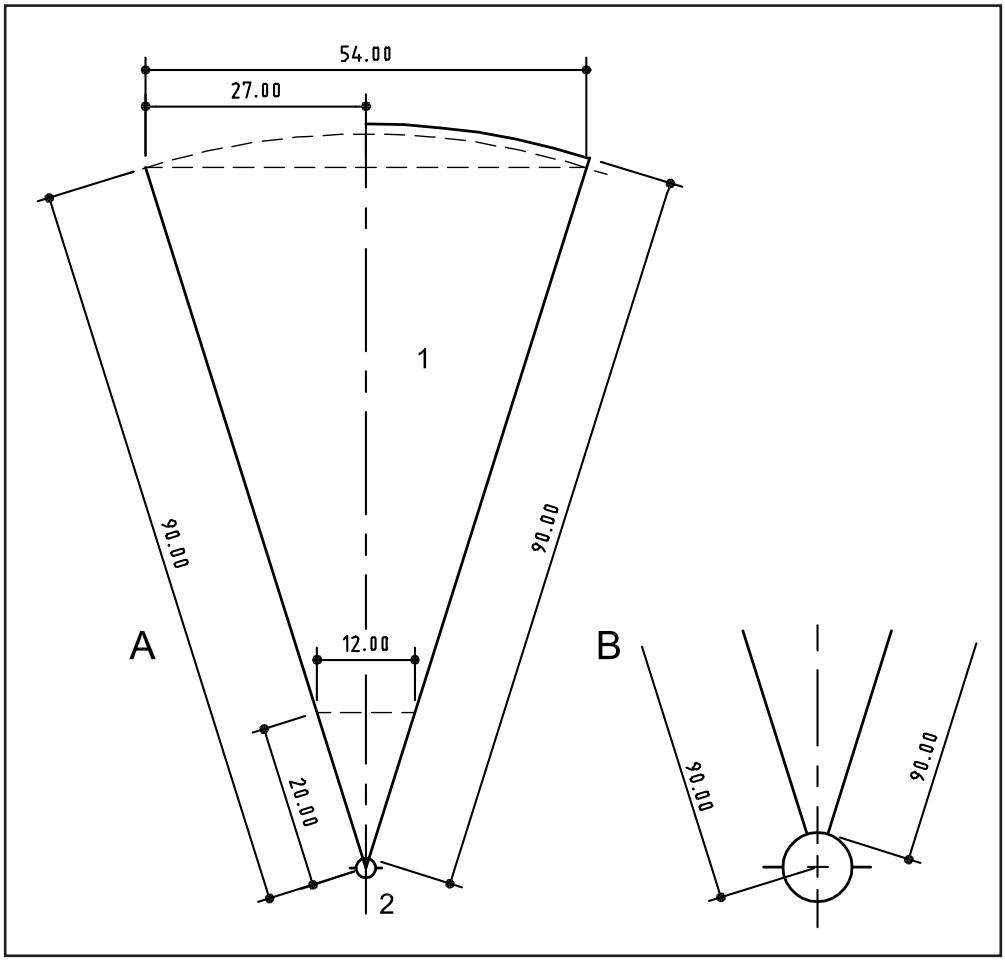

Figure 2.4.2.1 - Facility for the Hammer Throw (Dimensions in m)

A Setting out plan
B Marking plan

1 Landing sector
2 Throwing circle

It is reduced in size to 2.135m ± 0.005m for Hammer Throw by inserting a 0.1825m wide and 0.02m high ring of suitable construction. The inserted ring must be fixed into the throwing circle such that it is level with the outer ring and constitutes no risk to the athletes. The inside rim of the insert shall be painted white. If the top of the insert is coloured white it is necessary to extend the 0.05m wide white lines defining the rear portion of the circles in a distinctive colour across the insert. For the throwing circle for Hammer Throw, a Shot Put circle (without stop board) may also be used if it is furnished with a suitable protective cage in accordance with Section 2.4.2.3.

The surface finish to the concrete circle should be slightly smoother for hammer throwing than for discus throwing. When a circle is used for both discus and hammer throwing a compromise finish is required.

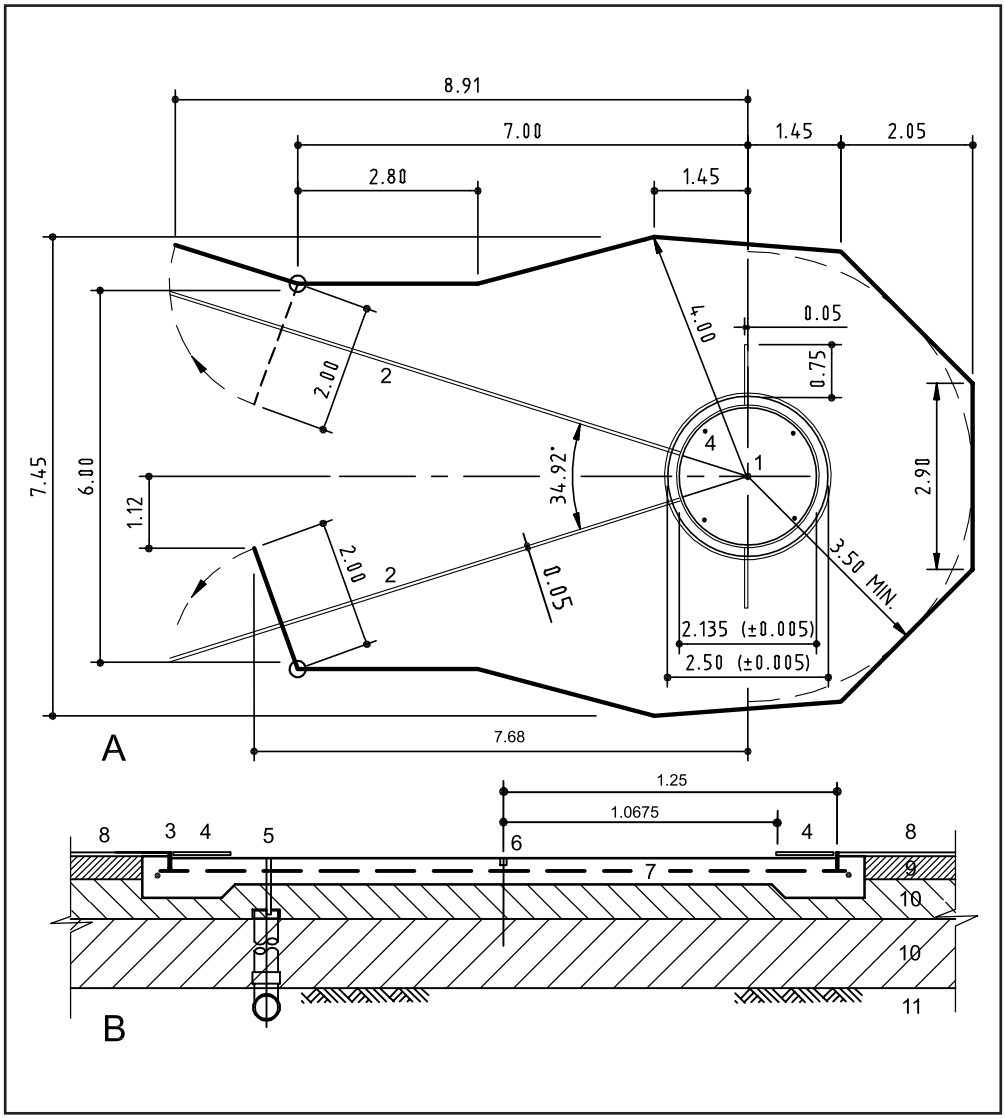

Figure 2.4.2.2 - Detail plan of combined throwing and cage siting for Discus and Hammer Throw
(Dimensions in m)

A Layout plan
B Section through throwing circle

1 Centre point (intersection point of setting out plan)
2 Marking for the landing sector
3 Circular metal rim
4 Demountable hammer insert
5 Drainage pipe
6 Centring hole 4mm diameter (brass tube)
7 Concrete base with reinforcing mesh
8 Synthetic surface
9 Asphaltic concrete
10 Gravel base layers
11 Subgrade

2.4.2.3 Safety Cage for the Hammer Throw (Figure 2.4.2.2 and Chapter 6)

It is essential that the protection cage installed, conforms with the requirements of Chapter 6 and is properly erected and operated. The necessary equipment for erecting and anchoring the protective enclosure should be installed together with the throwing circle.

2.4.2.4 Landing Sector for the Hammer Throw (Figure 2.4.2.1)

For the landing sector Section 2.4.1.4 shall apply in general with the following exceptions:

The length of the landing sector shall be 90m. Its angle of 34.92 degrees will be attained if the two boundary lines at a distance of 90m are spaced 54m apart.

2.4.2.5 Safety of the Facility for the Hammer Throw

Section 2.4.1.5 shall also apply to the safety of the facility for the Hammer Throw.

2.4.2.6 Suitability for Competition and Official Acceptance of the Facility for the Hammer Throw

Hammer throw facilities must conform to the specifications. This can be established when inspecting the 400m Standard Track.

2.4.3 FACILITY FOR JAVELIN THROW (See 2.1.1.3)

2.4.3.1 Layout of the Facility for the Javelin Throw (Figure 2.4.3.1)

The Javelin Throw facility includes a runway, a throwing arc and a landing sector. Usually, two facilities are constructed with a runway parallel to the straights located through the centre of each of the segments. Since the length of the runway exceeds the space available in the segment, it is usually extended across the track and track border. In such cases, it is necessary to have a removable kerb and the height of the surfaces of the oval track and the segment must be the same along the track border. For a runway in either segment, the landing sector is located in the grass area inside the track.

2.4.3.2 Runway for the Javelin Throw (Figure 2.4.3.2)

The length of the runway shall be 30.00m minimum and is measured from the beginning of the runway to the rear edge of the side markings outside the runway at the same level as the throwing arc. It shall be marked by two parallel white lines 0.05m wide and 4.00m ± 0.01m apart. Two white square marks 0.05mx0.05m beside the runway four metres back from the end points of the throwing arcs assist the officials in determining the leaving of the runway and in speeding up measuring the throw. The runway is covered with the same surface as the track.

2.4.3.3 Throwing Arc for the Javelin Throw (Figure 2.4.3.2 and Chapter 6)

The throwing arc is situated at the end of the runway. It may be painted or made of wood (3 to 5 weather-proof, bonded layers) or a suitable non-corrodible material like plastic. If not marked with paint, it must be installed flush with the surface of the runway.

The throwing arc shall be 0.07m wide, white and curved with a radius of 8.00m from the centre point in the middle of the runway, in the throwing direction. It is advisable that the centre point is marked with a synthetic plug of a different colour to the surface, with a diameter and surface thickness of 20mm to 30mm. Lines shall be drawn from the extremities of the arc at right angles to the parallel lines marking the runway. These lines shall be white, 0.75m in length and 0.07m wide.

2.4.3.4 Landing Sector for the Javelin Throw (Figure 2.4.3.1)

For the landing sector, Section 2.4.1.4 shall apply in general with the following exceptions:

The sector lines shall be laid from the centre point on the runway through the cross-points of the throwing arc and the lines of the runway. The length of the sector shall be 100m. At this distance the inner edges of the sector lines shall be 50.00m apart. The marking of the sector lines shall extend to a distance appropriate to the competition.

2.4.3.5 Safety of the Facility for the Javelin Throw

For the safety of the facility for Javelin Throw, an even-surfaced transition must be guaranteed between segment and oval track in the area around the removable kerb.

For the safety of the facility for Javelin Throw, see 2.4.1.5.

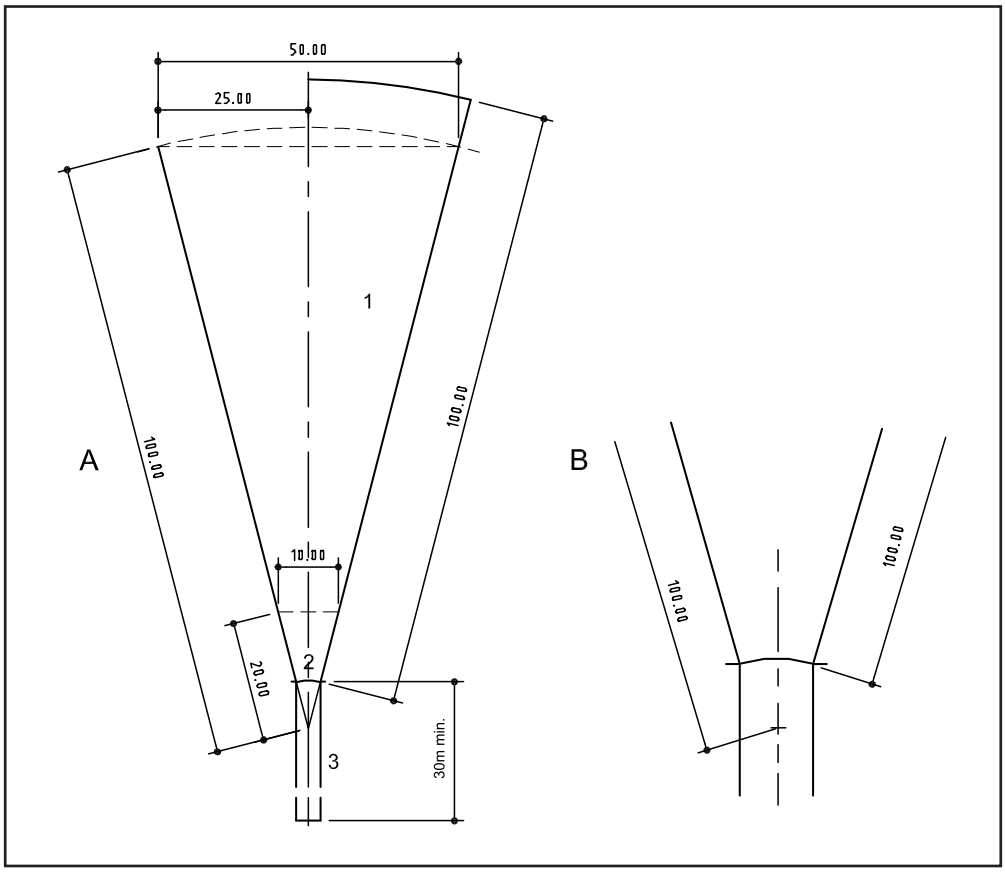

Figure 2.4.3.1 - Facilitiy for the Javelin Throw (Dimensions in m)

A Setting out plan
B Marking plan

1 Landing sector
2 Throwing arc
3 Runway

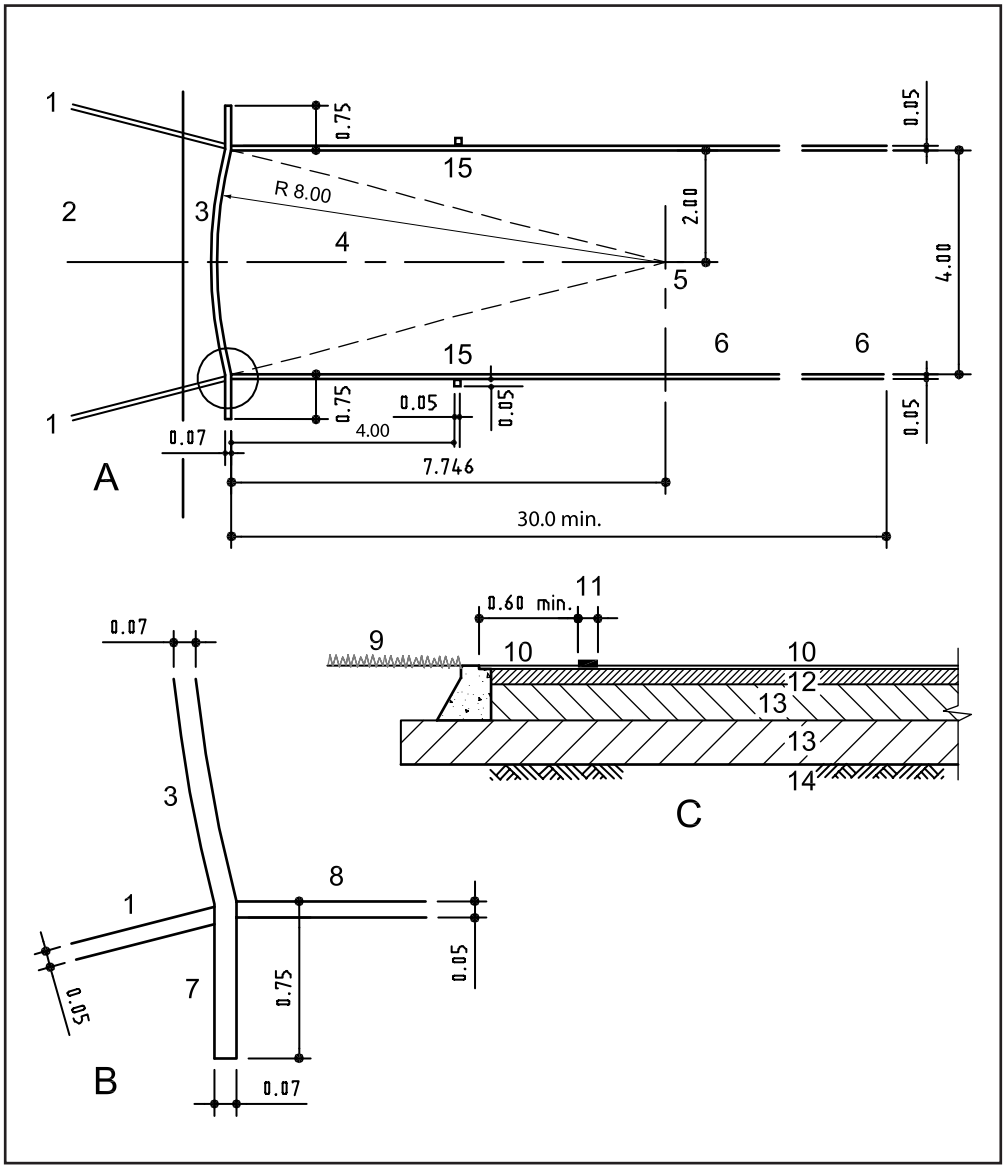

Figure 2.4.3.2 - Runway and throwing arc for the Javelin Throw (Dimensions in m)

A Layout plan
B Detail
C Section

1 Marking for throwing sector
2 Landing area
3 Throwing arc
4 Reinforced area of runway
5 Centre point = intersecting point of setting out plan
6 Runway
7 Marking of extension of throwing arc
8 Marking of lateral border of runway
9 Turf surface
10 Synthetic surface
11 Throwing arc marking
12 Asphaltic concrete
13 Gravel base layers
14 Subgrade
15 White squares 0.05mx0.05m

2.4.3.6 Suitability for Competition and Official Acceptance of the Facility for the Javelin Throw

Javelin throw facilities must conform to the specifications. This can be established when inspecting the 400m Standard Track.

2.4.4 FACILITY FOR THE SHOT PUT (See 2.1.1.3)

2.4.4.1 Layout of the Facility for the Shot Put (Figure 2.4.4.1)

The Shot Put facility includes a throwing circle, a stop-board and a landing sector.

At least two facilities are usually constructed at one end of the arena to allow simultaneous competition by two groups of athletes under similar conditions. The circles are located within the segments dependent upon the location of other Field Event facilities. The landing sector is usually located in the grass area inside the track.

2.4.4.2 Throwing Circle for the Shot Put (Figure 2.4.4.2)

For the throwing circle, Section 2.4.1.2 shall apply in general with the following exception:

The inside diameter of the throwing circle is 2.135m ± 0.005m.

2.4.4.3 Stop Board for the Shot Put (Figure 2.4.4.2 and Chapter 6)

The stop board shall be painted white and made of wood or other suitable material in the shape of an arc so that the inner edge coincides with the inner edge of the circle. It shall be placed midway between the sector lines and be firmly fixed to the ground. It shall be 1.21m ± 0.01m long on the inside. The width at the narrowest point is 0.112m ± 0.002m and the height is 0.10m ± 0.002m measured above the adjoining surface of the circle when the stop board is firmly in position.

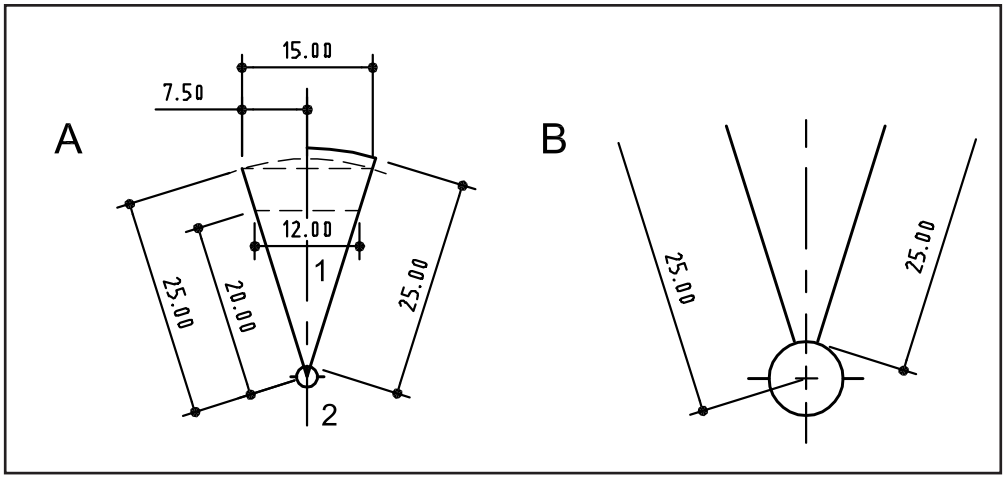

Figure 2.4.4.1 - Facility for the Shot Put (Dimensions in m)

A Setting out plan
B Marking plan

1 Landing sector
2 Throwing circle

2.4.4.4 Landing Sector for the Shot Put (Figure 2.4.4.1)

For the landing sector, Section 2.4.1.4 shall apply in general with the following exceptions:

The length of the sector is 25.00m. The angle of 34.92 degrees will be attained if the two sector lines, at a distance of 25.00m, are spaced 15m apart.

2.4.4.5 Safety of the Facility for the Shot Put

For the safety of the facility for the Shot Put, care must be taken to ensure that nobody enters the landing sector during the throw.

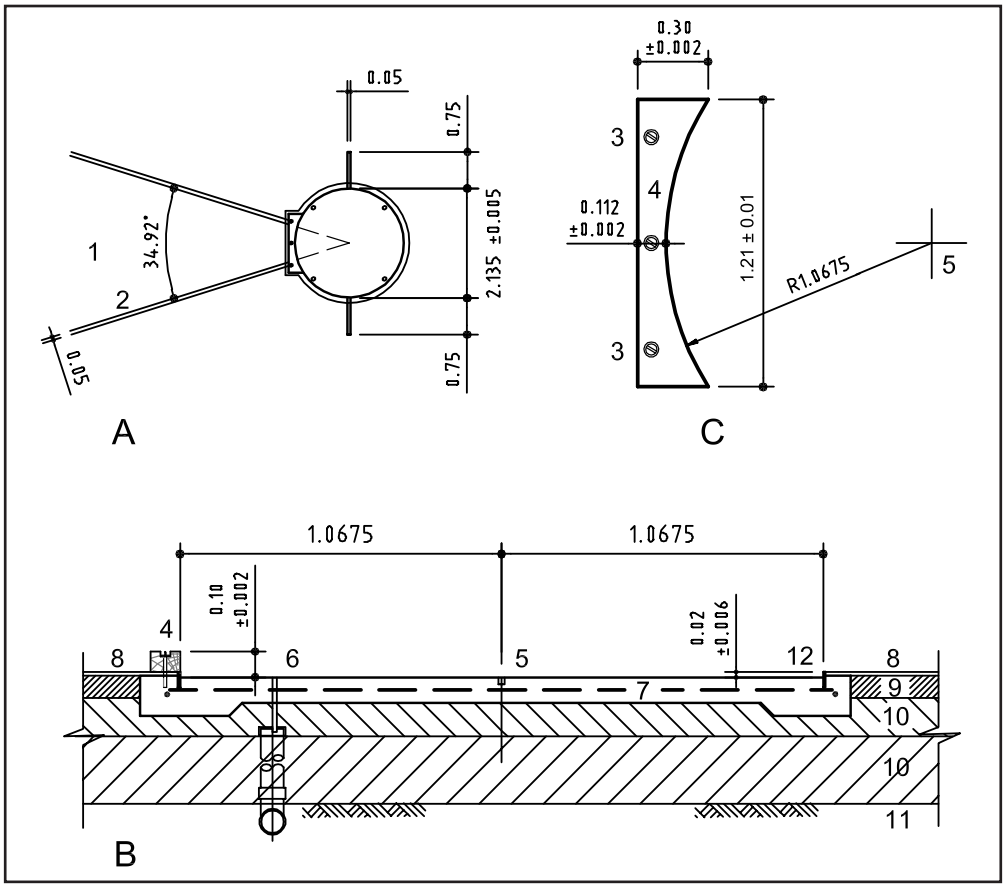

Figure 2.4.4.2 - Shot Put circle (Dimensions in m)

A Layout plan
B Detail section
C Stop board

1 Landing sector
2 Marking for the landing sector
3 Fastening attachment
4 Stop board
5 Centring hole 4mm diameter (brass tube)
6 Drainage pipe
7 Concrete base with reinforcing mesh
8 Synthetic surface
9 Asphaltic concrete
10 Gravel base layer
11 Subgrade
12 Circular metal rim

2.4.4.6 Suitability for Competition and Official Acceptance of the Facility for the Shot Put

Shot Put facilities must conform to the specifications. This can be established when inspecting the 400m Standard Track.

2.5 Layout of the "Standard Competition Area”

This area corresponds to the categories given in Table 1.5.3, Chapter 1, Construction Category I, and is recommended by the IAAF as the Standard Competition Area.

The Field Events are evenly distributed over the arena to avoid congestion and to satisfy the needs of the spectators. This layout avoids undue disruption of events by ceremonies and counterbalances the concentration of interest in the finish area.

The layout is, of course, flexible. Local climatic conditions particularly wind conditions and the effects of the rays of the sun on jumpers / vaulters must be considered.

Figures 2.5b and 2.5c show the slope of the northern segment (radial and lean-to slopes), Figures 2.5d and 2.5e the slope of the southern segment (radial and lean-to slopes).

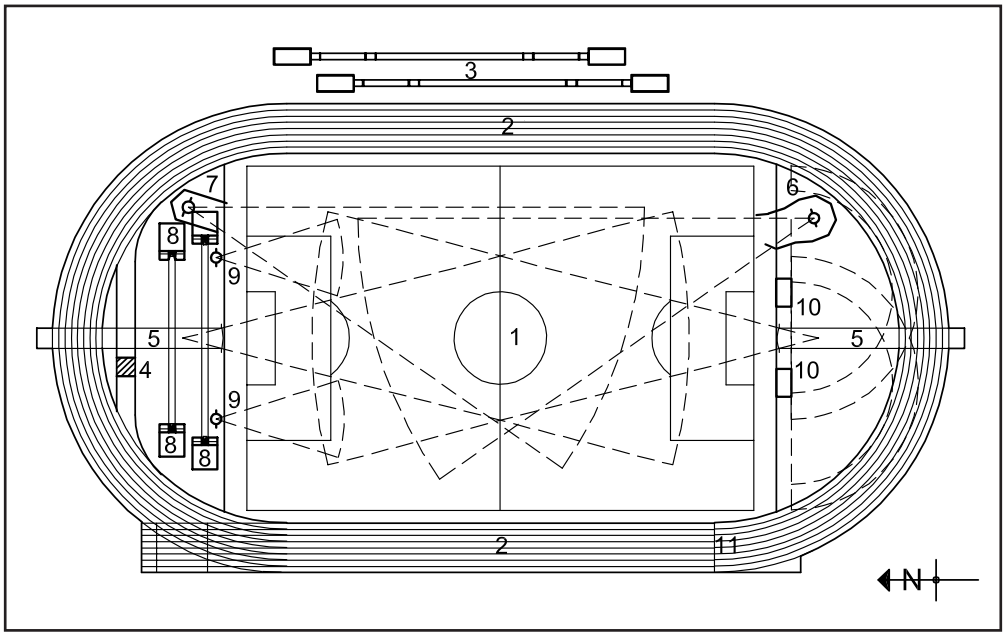

Figure 2.5a - Standard layout of competition facility

1 Footbal pitch
2 Standard Track
3 Long and Triple Jump facility
4 Water jump
5 Javelin Throw facility
6 Discus and Hammer Throw facility
7 Discus Throw facility
8 Pole Vault facility
9 Shot Put facility
10 High Jump facility
11 Finish line

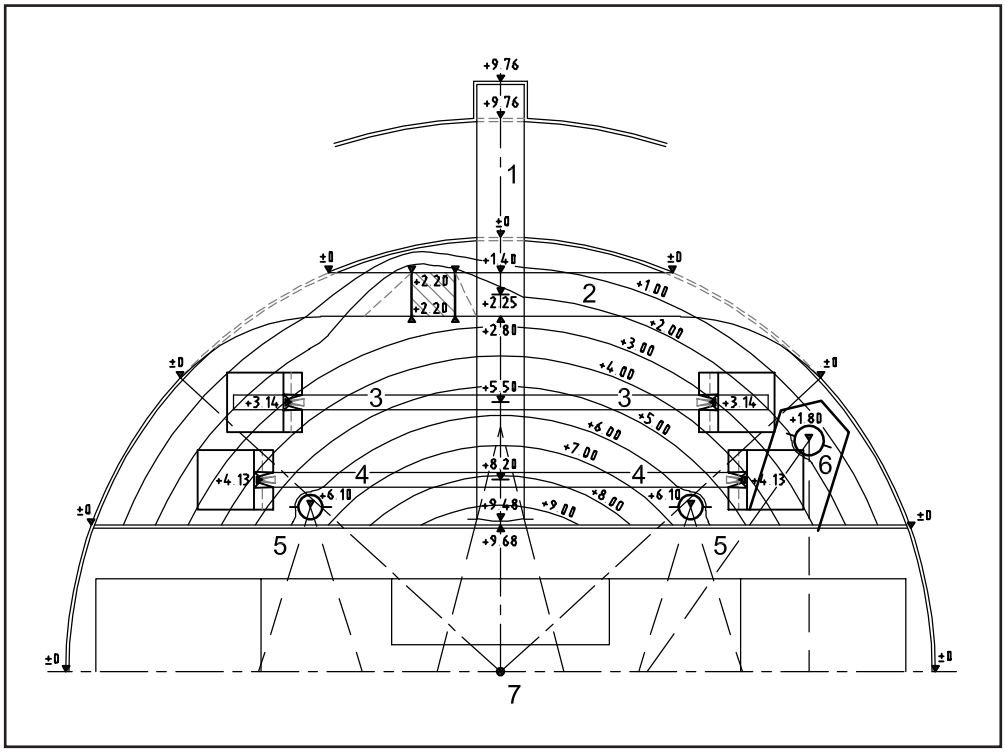

Figure 2.5b - North segment of the 400m Standard Track with radial slope of 0.4%
(Dimensions of height in cm)

1 Javelin runway
Start of runway: +9.76cm
End of runway (throwing arc): +9.48cm
2 Steeplechase track
3 Pole Vault facility
Start of runway: +3.14cm
Centre of runway: +5.50cm
End of runway: + 3.14cm
4 Pole Vault facility
Start of runway: +4.13cm (+4.45cm resp.)
Centre of runway: +8.20cm
End of runway: +4.13cm
5 Shot Put circle: +6.10cm
6 Discus circle: +1.80cm
7 Centre of semicircle

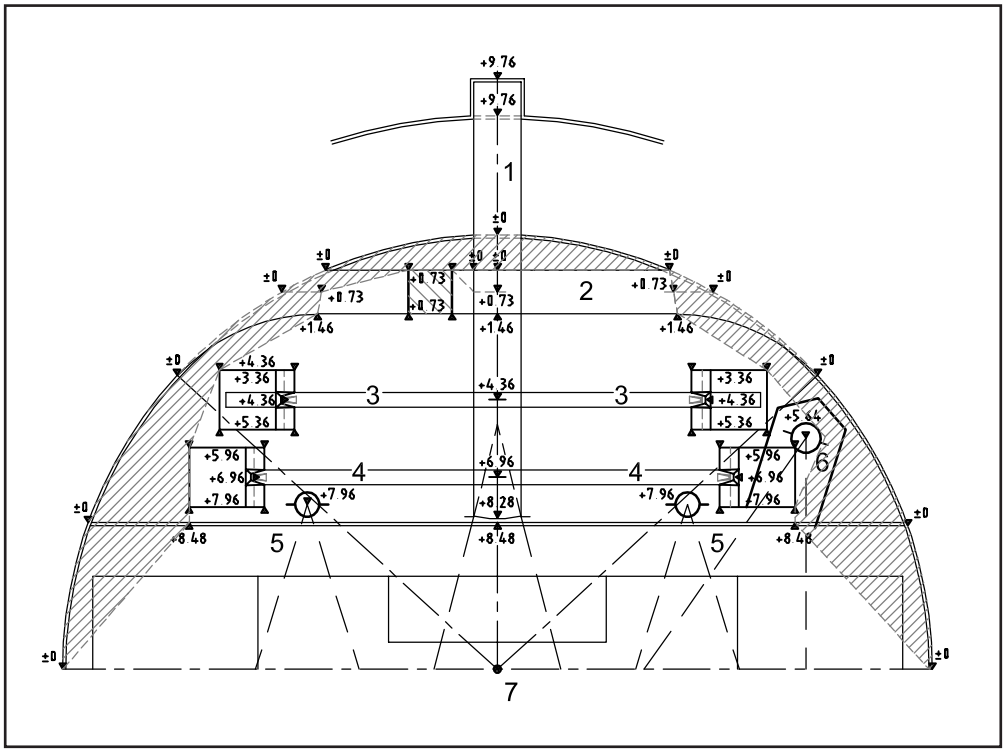

Figure 2.5c - North segment of the 400m Standard Track with lean-to-slope of 0.4%
(Dimensions of height in cm)

1 Javelin runway
Start of runway: +9.76cm
End of runway (throwing arc): +8.48cm
2 Steeplechase track
3 Pole Vault facility
Start of runway : +4.36cm
Centre of runway: +4.36cm
End of runway: +4.36cm
4 Pole Vault facility
Start of runway : +6.96cm
Centre of runway: +6.96cm
End of runway: +6.96cm
5 Shot Put circle: +7.96cm
6 Discus circle +5.64cm
7 Centre of semicircle

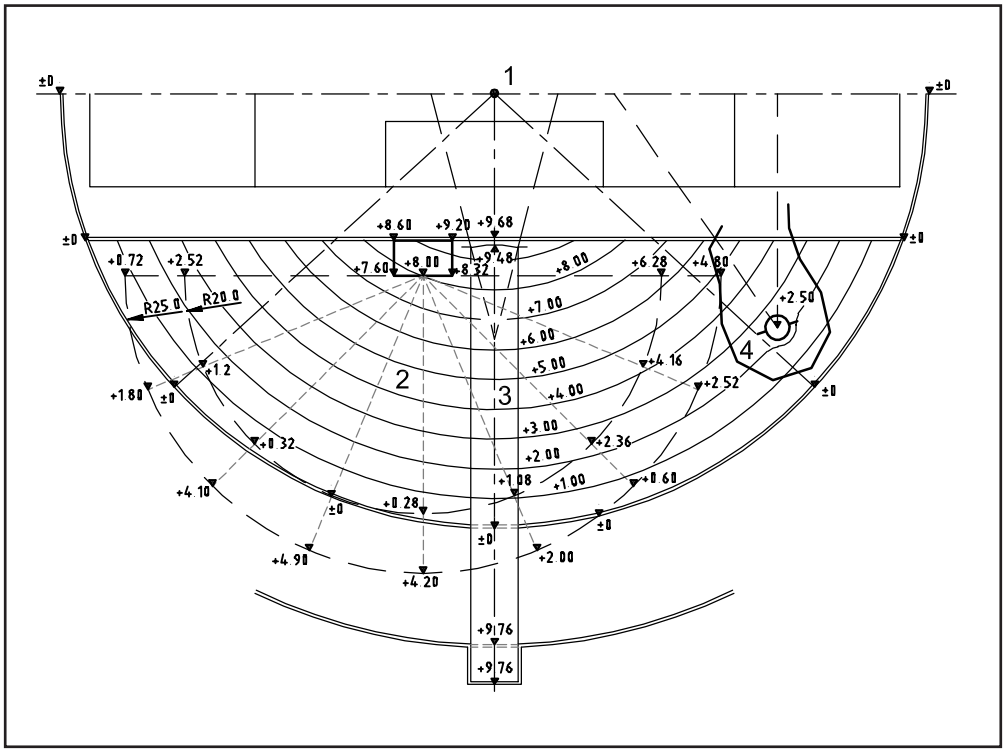

Figure 2.5d - South segment of the 400m Standard Track with radial slope of 0.4%
(Dimensions of height in cm)

1 Centre of semicircle
2 High Jump facility
Take-off point: +8.00cm
Start points on runway length 20m: +6.28cm to +2.52cm
Start points on runway length 25m: +4.80cm to +0.72cm
3 Javelin runway
Start of runway: +9.76cm
End of runway (throwing arc): +9.48cm
4 Discus / Hammer circle:+2.50cm

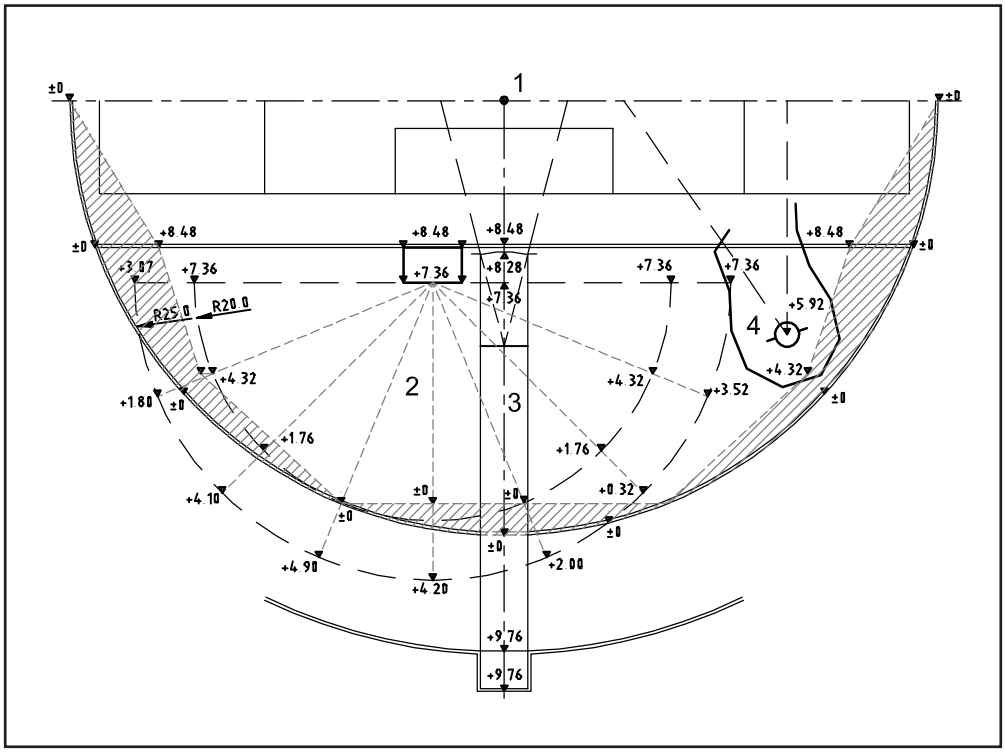

Figure 2.5e - South segment of the 400m Standard Track with lean-to-slope of 0.4%
(Dimensions of height in cm)

1 Centre of semicircle
2 High Jump facility
Take-off point: +7.36cm
Start points on runway length 20m: +7.36cm to +7.36cm
Start points on runway length 25m: +7.36cm to +3.07cm
3 Javelin runway
Start of runway: +9.76cm
End of runway (throwing arc): +8.28cm
4 Discus / Hammer circle: +5.92cm

2.6 Alternatives for Training Facilities

During the planning and construction stages for competition facilities, full consideration must be given to the stipulations listed in Sections 2.1 to 2.5. For training facilities, a variety of alternatives are permissible. Long jump facilities, for example, may have several runways next to each other. High Jump training facilities may be arranged to allow for run-ups from both sides of the landing mats. Shortened runways may also be considered - especially for school sports. The size of landing mats must be commensurate with the height being jumped by the athletes. However, a prerequisite for all facilities is the observance of safety aspects.

Generally, training facilities cater for several events of Track and Field and, where the facilities for Track and Field are combined with small pitches, for ball games. Of course, this type of design will normally preclude a simultaneous use of the facilities

for the individual sports available there. Organisational measures can be implemented to overcome this disadvantage (e.g. scheduling of training times). On the other hand, this type of design will result in considerable savings in terms of space and building costs.

Concepts and combinations for training facilities may differ considerably from country to country. The examples shown in Sections 2.6.1 to 2.6.6, therefore, in no way claim to be complete.

2.6.1 TRAINING FACILITIES FOR THE STRAIGHT

If necessary, the Standard Track can be supplemented along the finishing straight by a second straight, so that several groups will have an opportunity to practice simultaneously. The second track can also save time in qualifying rounds at mass events (e.g. school sports competitions). It can serve as a runway for the Long and Triple Jump and the Pole Vault, provided that landing areas and landing mats adjoin the starting or run-out area.

2.6.2 TRAINING FACILITIES FOR THE LONG AND TRIPLE JUMP (Figures 2.6.2a to c)

Long and Triple Jump facilities may be accommodated with two or three runways positioned alongside each other and one common landing area in the north segment of a Standard Competition Arena with the direction of jumping towards the west

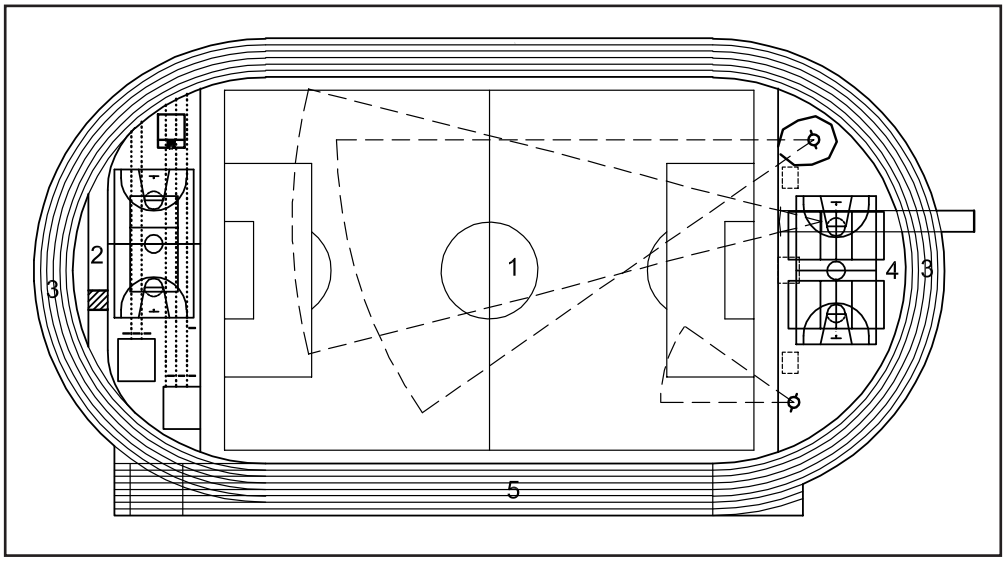

Figure 2.6.2a - 400m Standard Track as a warm-up and training area
(Dimensions in m)

1 Track interior (playing field and landing area for throwing events)
2 Segment with water jump, Pole Vault, Long and Triple Jump, and ball games area for basketball and volleyball
3 Six-lane oval track
4 Segment with Discus / Hammer circle, Shot Put circle, High Jump, Javelin Throw, ball games area for volleyball (2 courts) and basketball
5 Eight-lane straight (for details of segments, see figures 2.6.2b and 2.6.3)

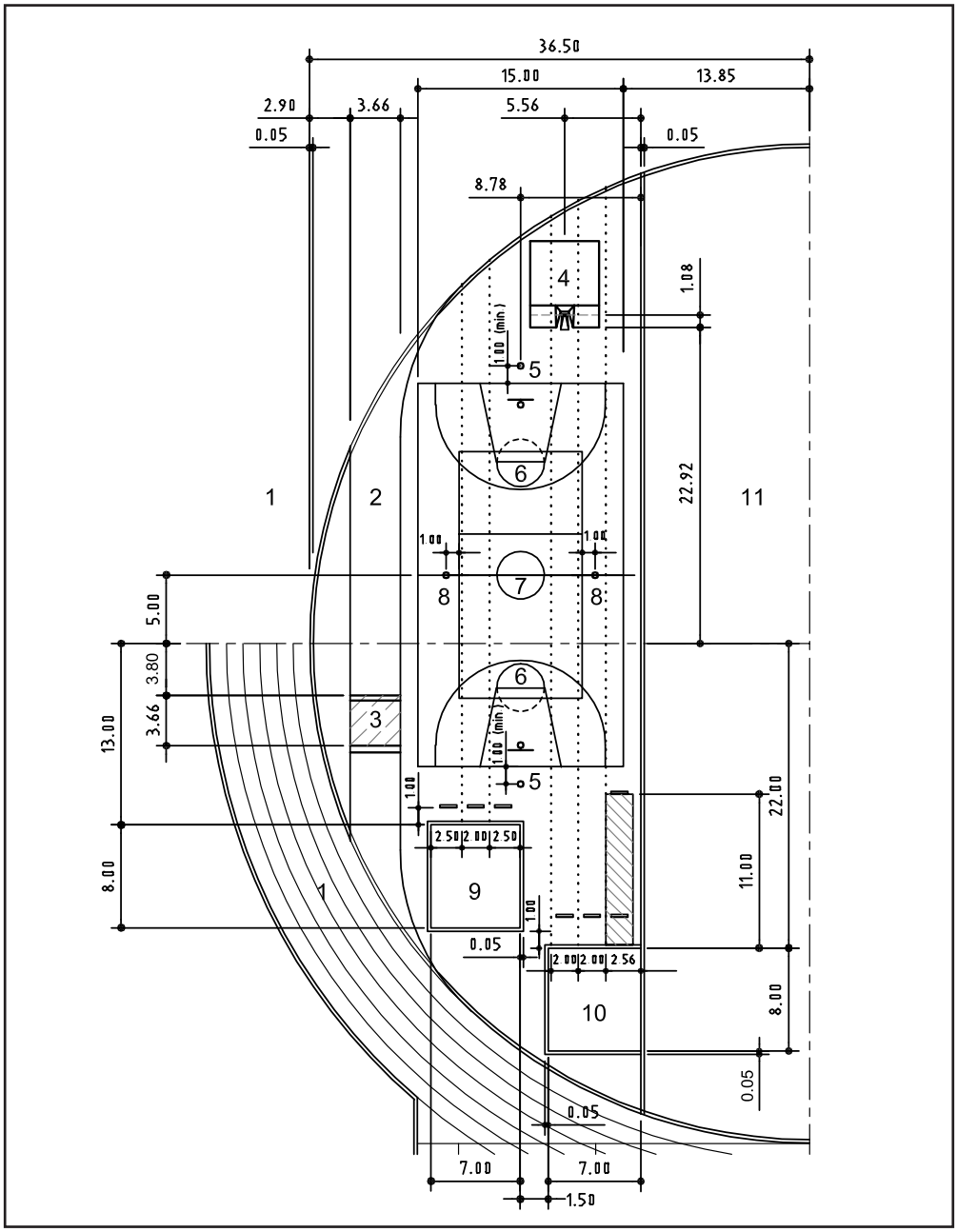

Figure 2.6.2b - Detail of the northern segment of the plan shown in figure 2.6.2a
(Dimensions in m)

1 Six-lane oval track
2 Steeplechase track
3 Water jump (surface with increased thickness)
4 Pole Vault
5 Ground anchor for basketball backboard support
6 Basketball court, 15m x 28m
7 Volleyball court, 9m x 18m
8 Socket for volleyball net post
9 Three-lane Long Jump with shortened runway
10 Three-lane Long Jump and single-lane Triple Jump with competition-length runway (surface with increased thickness between Triple Jump take-off board and landing area)
11 Grass playing field

(Figures 2.6.2a and b) or on a multi-purpose pitch for ball games and Track and Field Events (Figure 2.6.2c). The possibility of an arrangement in the extension of the finishing straight of a standard arena is discussed under Section 2.6.1.

In multiple jumping facilities for training, a single 4.00m wide synthetic runway will be more economical than two separate 1.22m runways. In such a training facility a landing area of total width 5.00m will accommodate two landing areas and a 7.00m width will be adequate for a single 6.00m wide runway.

2.6.3 TRAINING FACILITIES FOR THE HIGH JUMP (Figures 2.6.2a, 2.6.2c and 2.6.3)

Two High Jump training facilities can be arranged simultaneously in the south segment of a 400m Standard Track. These will allow for training with shortened run-ups with the track kerb in place or with full run-ups with the kerb removed (Figures 2.6.2a and 2.6.3).

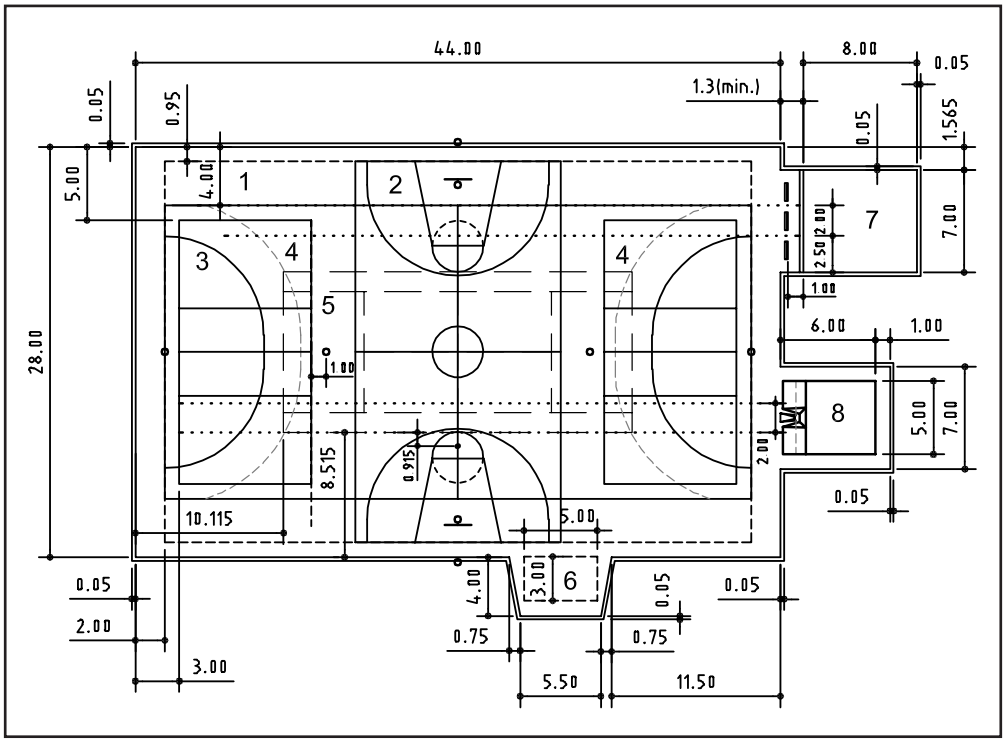

Figure 2.6.2c - Multi-purpose facility for ball games and athletics
(Dimensions in m)

1 Rectangular field, 26.10m x 40m
2 Basketball court, 14m x 26m
3 Handball court, 20m x 40m
4 Volleyball court, 9m x 18m
5 Tennis court, 10.97m x 23.77m
6 High Jump
7 Long Jump
8 Pole Vault

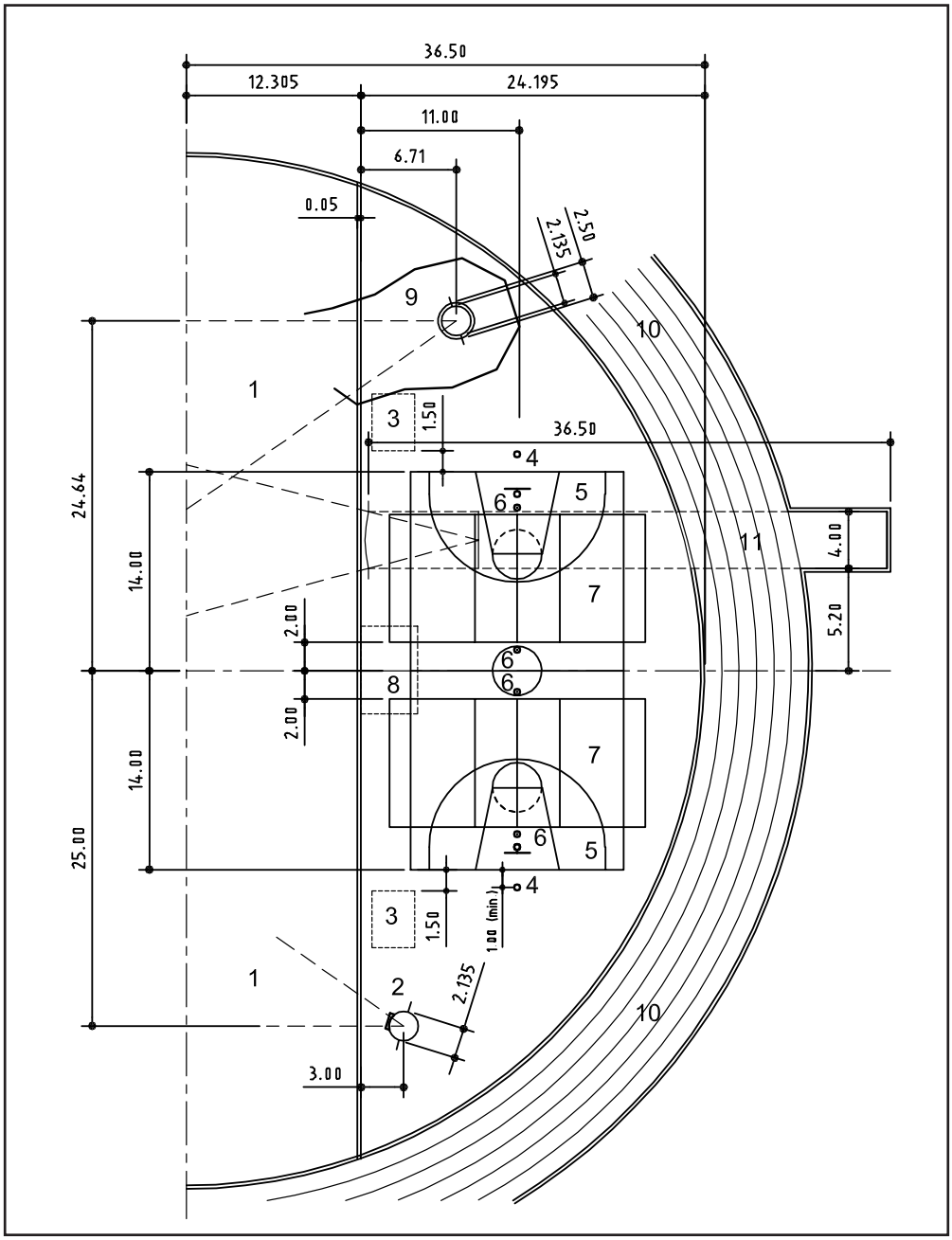

Figure 2.6.3 - Detail of the southern segment of the plan shown in figure 2.6.2a
(Dimensions in m)

1 Grass playing field
2 Shot Put
3 High Jump training area with 4m x 3m landing mat
4 Ground anchor for basketball backboard support
5 Basketball court, 15m x 28m
6 Socket for volleyball net post
7 Volleyball court, 9m x 18m
8 Competition High Jump with 6m x 4m landing mat
9 Discus / Hammer Throw
10 Six-lane oval track
11 Javelin runway

A facility for training with a landing mat suitable for competition can equally be accommodated on the north side of a small pitch (Figure 2.6.3).

There is also a possibility of temporarily placing landing mats 5.00m x 5.00m or 5.00m x 6.00m in the centre of a small pitch, in order to allow two practice areas to be in use at the same time, even if with shortened run-ups.

2.6.4 TRAINING FACILITIES FOR THE POLE VAULT (Figures 2.6.2a and 2.6.2b)

A facility for the Pole Vault (direction of jump towards east) can be accommodated, especially in combination with the facility for Long Jump described under 2.6.2 (direction of jump towards west), in the north segment of a standard arena.

Other possibilities are demonstrated in Figures 2.6.2c, 2.6.6a, 2.6.6c and 2.6.6d.

2.6.5 TRAINING FACILITIES FOR THROWING AND SHOT PUT EVENTS
(Figures 2.6.2a and b, 2.6.3, 2.6.5a and b)

Facilities for Discus, Hammer and Javelin Throw are combined at one end of a large pitch into one "throwing field" (Figures 2.6.5a).The training facility for Shot Put can be provided by laying a concrete foundation with two or more marked throwing circles (without stop board) or by a lowered throwing circle (with stop board) and adjoining sandpit or unbound mineral surface as landing area (Figures 2.6.5b and 2.6.6a

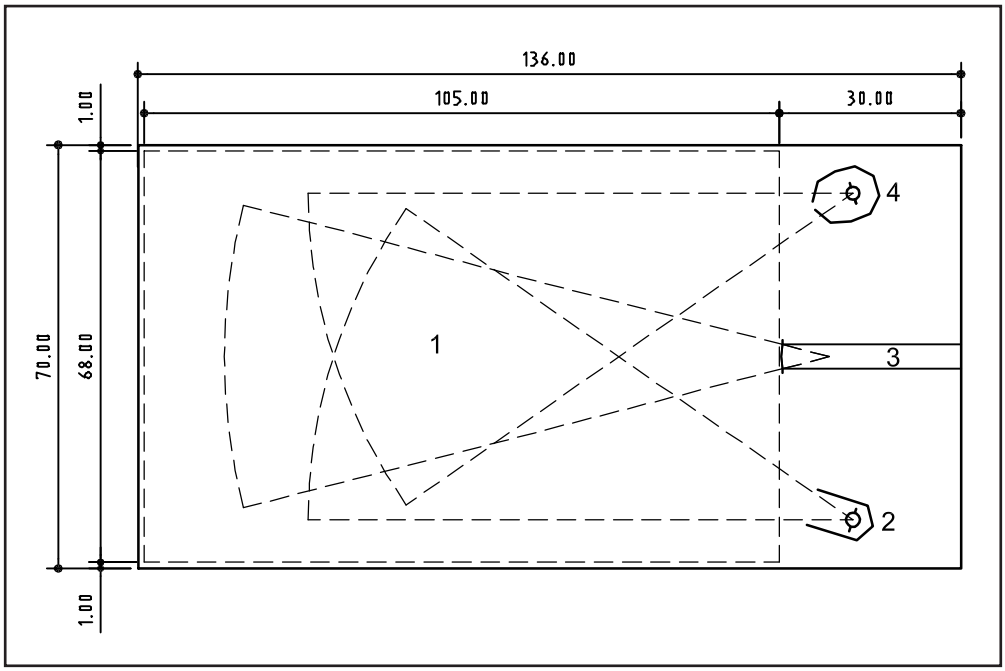

Figure 2.6.5a - Warm-up and training area for throwing events (Dimensions in m)

1 Playing field and landing area
2 Discus circle with safety cage
3 Javelin runway
4 Hammer circle with safety cage

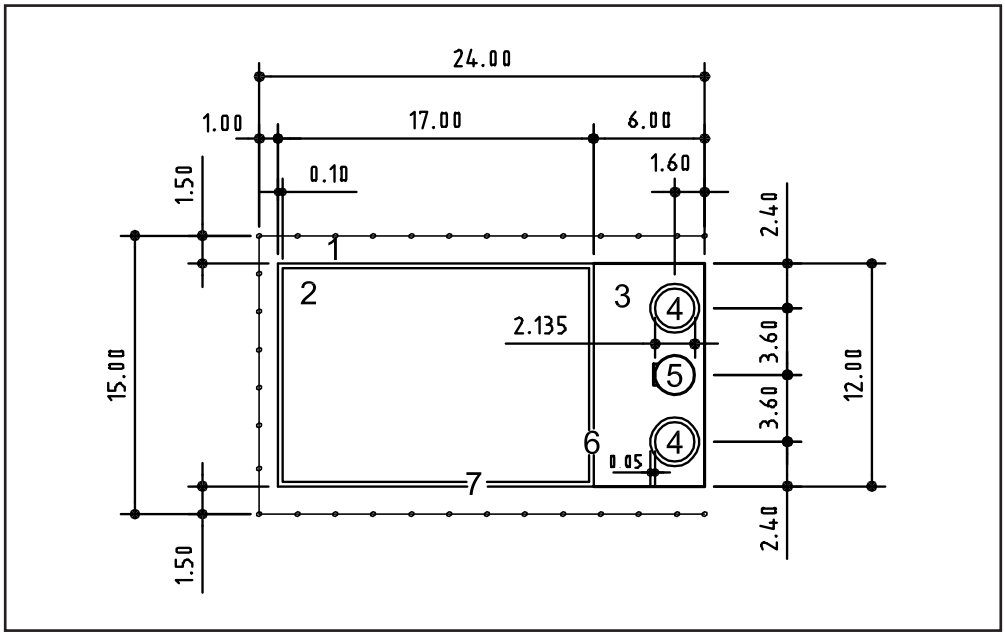

Figure 2.6.5b - Shot Put training area (Dimensions in m)

1 Periphery with safety barrier and shot-resistant surface
2 Landing area (unbound mineral surface)
3 Concrete area with three Shot Put circles
4 Marked circle
5 Recessed competition circle with stopboard
6 Separation between concrete slab and landing areas
7 Landing area surround with soft covering for safety

to d). If international standard athletes are to use the Shot Put facility particularly if they use a two-handed over the shoulder training technique then the length of the Shot Put training area shown in Figure 2.6.5b needs to be increased.

2.6.6 OTHER COMBINED TRAINING FACILITIES (Figure 2.6.6a to e)

If the surface of a large pitch is suitable for use as a runway, it will also be possible to combine this area with training facilities for sprints, Long and Triple Jump, High Jump, Pole Vault and Shot Put (Figure 2.6.6a).

Figure 2.6.6b shows a training facility which can be regarded as a first phase of development of a 400m standard arena. Here, a large pitch (grass surface) is combined with synthetic surfaces installed on two sides for sprints, High Jump and Long Jump, Shot Put and Discus Throw. The oval track can then be added in a further phase of construction.

Figure 2.6.6c shows a training facility in the second phase of a standard arena.

The facilities for Long and Triple Jump and for High Jump and Pole Vault have been accommodated in the segments of the 4-lane oval track. This facility can be used as a warm-up facility in compliance with Table 1.5.3, Chapter 1.

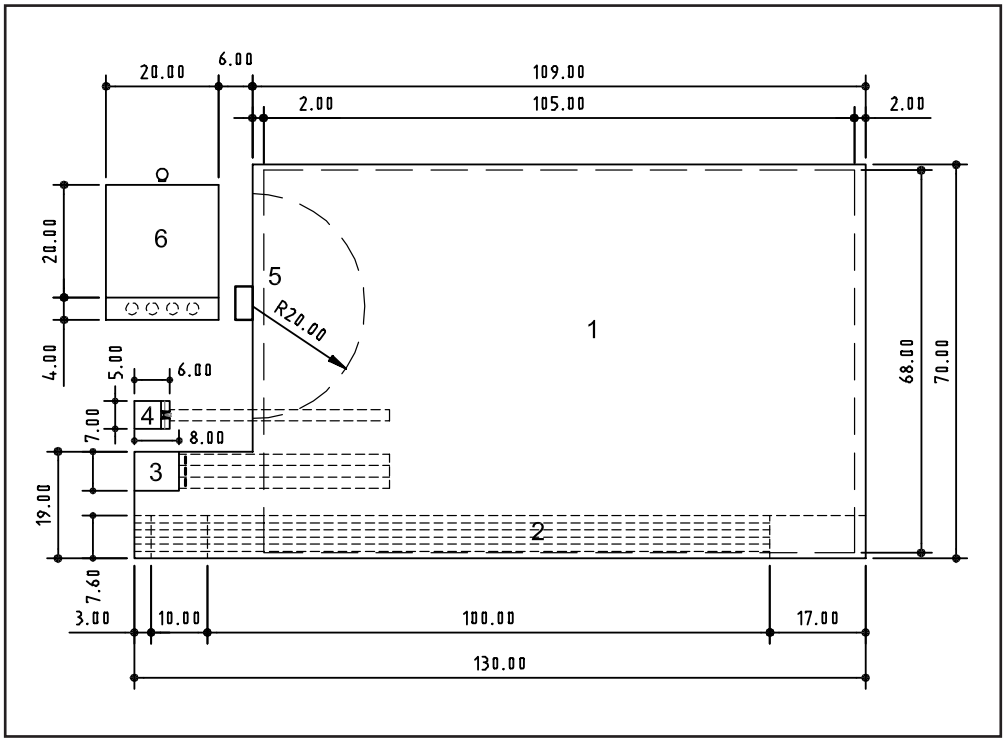

Figure 2.6.6a - Multi-purpose facility for ball games and athletics (Dimensions in m)

1 Playing field, 68m x 105m (unbound mineral surface)
2 Six-lane straight marked on the playing field
3 Three-lane long jump
4 Pole Vault
5 High Jump
6 Shot Put area with four painted circles on a concrete slab and one competition circle

Figures 2.6.6d and 2.6.6e offer suggestions for warm-up facilities in compliance with table 1.5.3, Chapter 1, in park-like or wooded areas. However, the arrangement of the facilities for Shot Put and throwing events requires a safe enclosure or close-set surrounding hedge with additional warning notices.

The layout as shown in Figure 2.6.6e offers limited facilities for running on sprint tracks, bend training and relay baton practice.

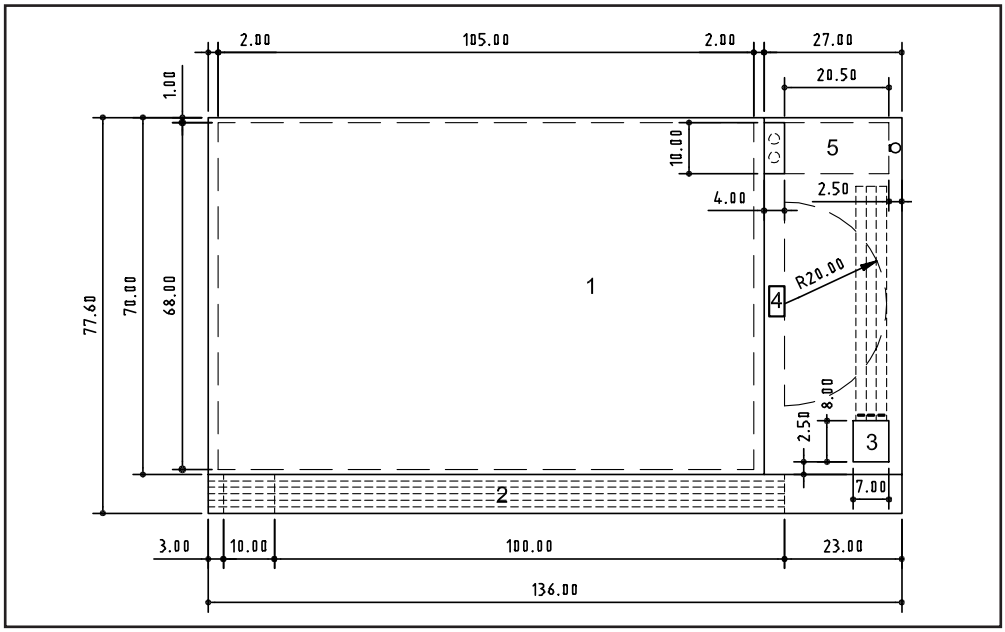

Figure 2.6.6b - Multi-purpose facility for ball games and athletics (Dimensions in m)

1 Playing field, 68m x 105m (grass surface)
2 Six-lane straight
3 Three-lane long jump
4 High Jump
5 Shot Put area with two painted circles on a concrete slab and one competition circle

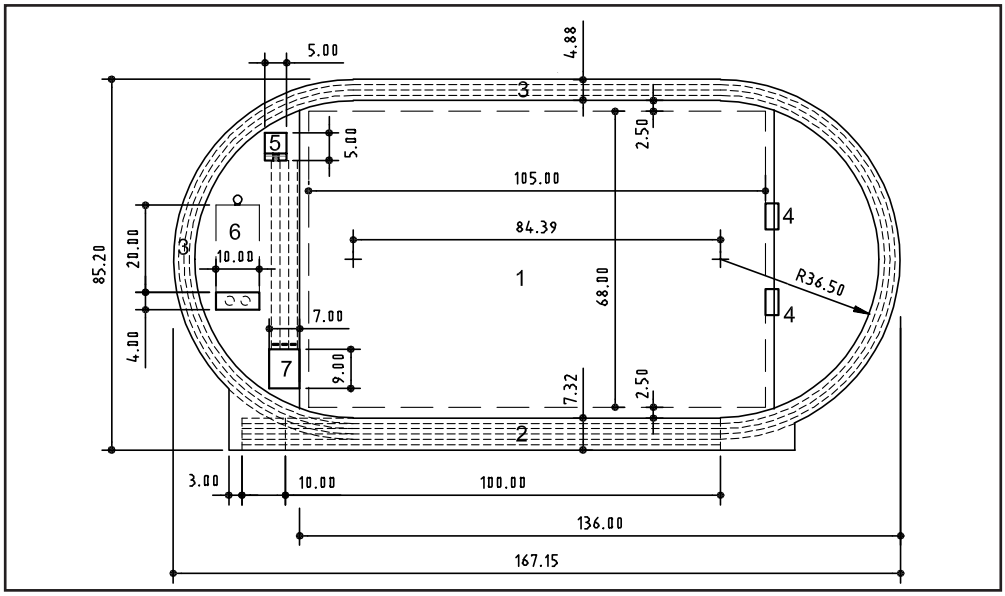

Figure 2.6.6c - Warm-up area with 400m Standard Track and large playing field (Dimensions in m)

1 Playing field, 68m x 105m
2 Six-lane straight
3 Four-lane oval track
4 High Jump
5 Pole Vault
6 Shot Put area with two painted circles on a concrete slab and one competition circle
7 Long and Triple Jump

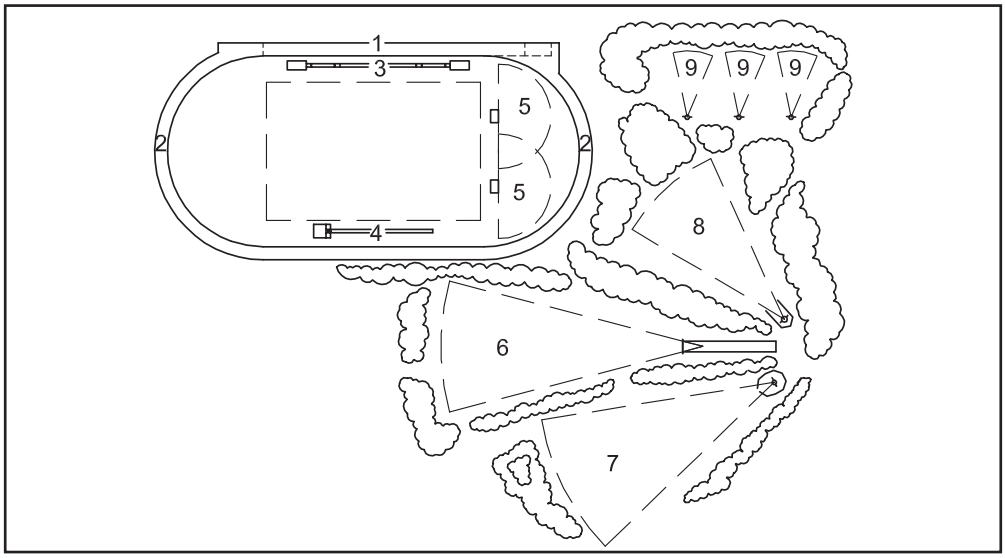

Figure 2.6.6d - Warm-up area with separate areas for throwing events

1 Four-lane straight
2 Four-lane oval track
3 Long and Triple Jump
4 Pole Vault
5 High Jump
6 Javelin Throw
7 Hammer Throw
8 Discus Throw
9 Shot Put

Source: Stades et terrain de sports, Henri Cettour, Editions du Moniteur, Paris

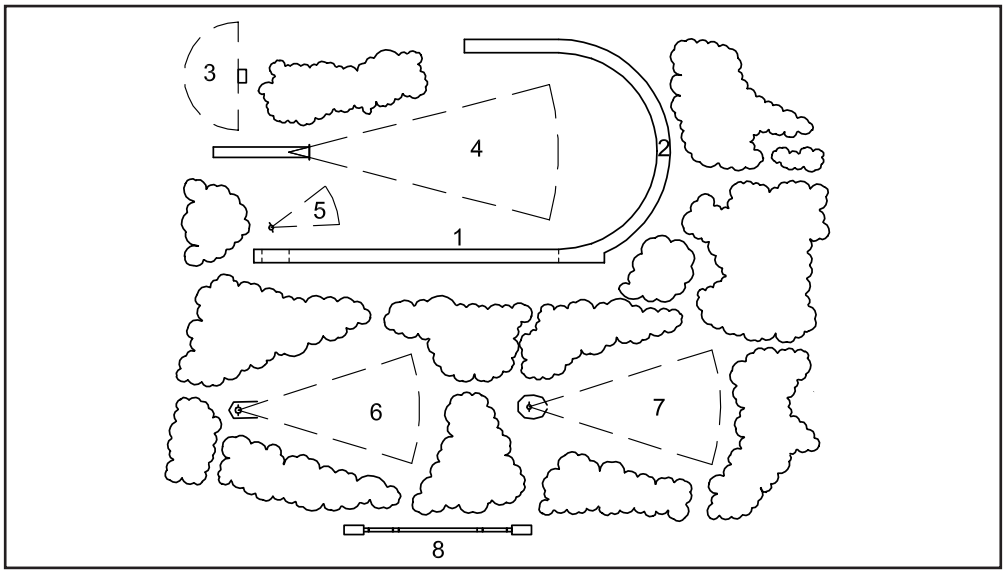

Figure 2.6.6e - Warm-up area, alternative to figure 2.6.6d

1 Four-lane straight
2 Four-lane training bend
3 High Jump
4 Javelin Throw
5 Shot Put
6 Discus Throw
7 Hammer Throw
8 Long and Triple Jump

Source: Stades et terrain de sports, Henri Cettour, Editions du Moniteur, Paris

CONTENTS - CHAPTER 3
CONSTRUCTION OF THE TRACK

3.1 Synthetic Surfaces *91*

3.1.1 DESCRIPTION ***91***

3.1.1.1 Prefabricated Sheet
3.1.1.2 In-Situ Systems
3.1.1.2.1 Cast Elastomers
3.1.1.2.2 Resin-Bound Rubber Crumb
3.1.1.2.3 Composite Systems

3.1.2 PERFORMANCE REQUIREMENTS ***95***

3.1.2.1 Durability
3.1.2.2 Effectiveness

3.1.3 TESTING ***102***

3.1.3.1 Imperfections
3.1.3.2 Evenness
3.1.3.3 Thickness
3.1.3.4 Force Reduction
3.1.3.5 Vertical Deformation
3.1.3.6 Friction
3.1.3.7 Tensile Properties
3.1.3.8 Colour
3.1.3.9 Drainage
3.1.3.10 General

3.1.4 REPAIRS AND REFURBISHMENTS ***114***

3.2 Foundation Requirements *116*

3.2.1 ESSENTIAL CRITERIA ***117***

3.2.2 FOUNDATION CONSTRUCTION TECHNIQUES ***117***

3.3 Surface Drainage *118*

3.3.1 GENERAL REMARKS ***118***

3.3.2 DEFINITIONS ***120***

3.3.2.1 Extraneous Water
3.3.2.2 Recipient
3.3.2.3 Water Outlet
3.3.2.4 Ring Mains / Collection Lines

3.3.3 REQUIREMENTS AND CONSTRUCTION ***120***

3.3.3.1 Track Surround Gutters
3.3.3.2 Individual Inlet Channels Within Track Surrounds
3.3.3.3 Open Gutters
3.3.3.4 Ring Mains / Collection Lines

3.3.4 CALCULATION AND DESIGN ***124***

3.3.4.1 Hydraulic Dimensioning of the Surface Water Drainage System
3.3.4.2 Pipe Cross-Sections
3.3.4.3 Surface Water Drainage Systems

3.3.5 DESIGN EXAMPLES ***129***

3.3.5.1 Standard Track with 8 Lanes, Infield (Turf), with Spectator Facilities
3.3.5.2 Standard Track with 6 Lanes, Infield (Turf), with 2.50m Wide Surrounding Path

3.4 Ground Drainage *135*

3.4.1 GENERAL REMARKS ***135***

3.4.2 DEFINITIONS ***136***

3.4.2.1 Surface Drains
3.4.2.2 Drainage Channels
3.4.2.3 Drain Filling
3.4.2.4 Catch Water Drain
3.4.2.5 Closed Pipes
3.4.2.6 Recipient
3.4.2.7 Inspection Shaft, Deposit Shaft, Draining Well

3.4.3 REQUIREMENTS AND CONSTRUCTION ***136***

3.4.3.1 Surface Drains
3.4.3.2 Drainage Channels
3.4.3.3 Closed Pipelines
3.4.3.4 Inspection Shaft, Deposit Shaft, Draining Well

3.4.4 CALCULATION AND DESIGN ***138***

3.4.4.1 Hydraulic Dimensioning of the Ground Drainage System

3.5 Watering of Sports Surfaces ***138***

3.5.1 REQUIREMENTS OF SPRINKLER SYSTEMS ***139***

3.5.1.1 Uniform Distribution
3.5.1.2 Sprinkling Periods

3.5.2 SPRINKLING PROCEDURES ***139***

3.5.2.1 Grass Surfaces
3.5.2.2 Unbound Mineral Surfaces

3.5.3 SPRINKLER SYSTEMS ***140***

3.5.3.1 Non-stationary Sprinkler Systems
3.5.3.2 Stationary Sprinkler Systems

3.5.4 WATER SUPPLY RATE AND WATER PRESSURE ***144***

3.5.5 WATER SUPPLY ***144***

3.5.5.1 Mains Supply
3.5.5.2 Open Water Bodies
3.5.5.3 Wells
3.5.5.4 On-site Water Storage

CHAPTER 3
CONSTRUCTION OF THE TRACK

There are three principal types of surface available for athletics. Until the early 1960's, most top-class competitions were held on unbound mineral surfaces (porous water-bound systems), although in many parts of the world national competitions were (and still are) held on natural grass tracks. Today, modern synthetic surfaces have displaced the other two types of surface for all major international events. Such synthetic systems are not only designed for superior dynamic characteristics, but need minimal maintenance compared to the surfacing systems they have displaced. Nevertheless, unbound mineral and natural grass surfaces are still widely used, the latter not only for the track but also of course as the infield area.

Information on unbound mineral surfaces and natural grass surfaces, not now included in this manual, is now available on request from the IAAF Office.

3.1 Synthetic Surfaces

3.1.1 DESCRIPTION

Modern synthetic surfaces for athletics tracks are high performance systems formulated to be durable and designed to offer the best combination of dynamic properties for athletes. Obviously the surface requirements of sprinters are different to those of the long-distance runners. The technology exists to vary the dynamic characteristics of the surface to favour one type of event against another. Clearly with major athletics meetings involving all events, such "tuning" of the track to favour one particular group of athletes is not acceptable. For this reason, all surfacing systems should offer a "balance" of dynamic properties which represents a compromise between the various needs of the different athletes using the facilities. The performance requirements stipulated by the IAAF are based on the needs of all athletes. Where facilities are intended for major international competitions, the surface of any warm-up track provided should have the same dynamic characteristics as the surface on the track in the main arena. There are two different construction solutions (Figure 3.1.1) and a number of different synthetic surfacing system types available for athletics.

Most of these systems are offered by a considerable number of different manufacturers and installers. It therefore follows that the number of surfacing products is very large. All synthetic surfaces rely on a good standard of base construction, which is an essential pre-requisite for the successful installation of the surface and for its long-term performance (See 3.2).

There are several sub-divisions of synthetic surface type, some of which are illustrated in Table 3.1.1. Some systems are prefabricated in the factory and delivered to site as rolls of material which are adhesive bonded to the base.

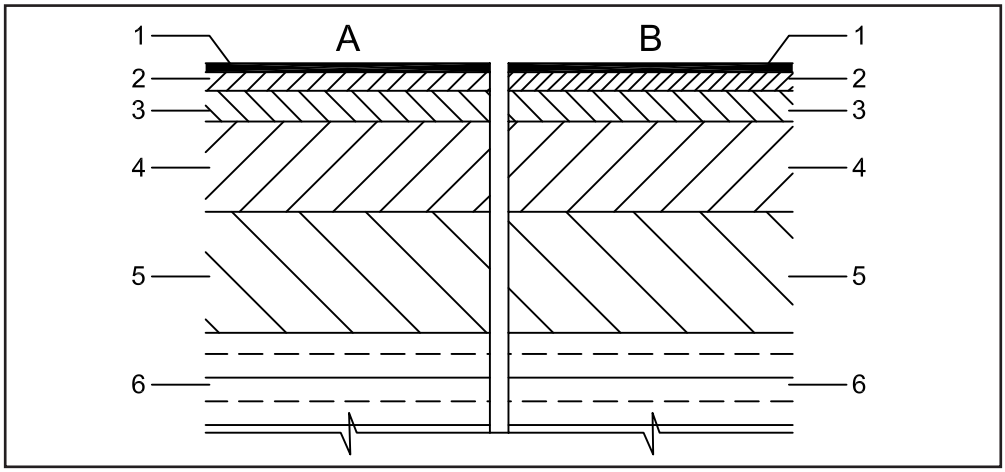

Figure 3.1.1 - Standard cross section of synthetic surfaces

A Water-permeable construction (left)

1 Synthetic surface
2 Open grade asphaltic concrete finishing layer
3 Dense grade asphaltic concrete correction layer
4 Base - crushed stone or gravel
5 Subbase - crushed stone or gravel
6 Select fill or subgrade

B Non-permeable construction (right)

1 Elastomer
2 Dense grade asphaltic concrete finishing layer
3 Dense grade asphaltic concrete finishing layer
4 Base - crushed stone or gravel
5 Subbase - crushed stone or gravel
6 Select fill or subgrade

	Permeable construction			Non-permeable construction			
	A	B	C	D	E	F	G
Design							
Designation	texture coated surfacing	porous coated surfacing	porous surfacing one-layer	cast coated surfacing	cast surfacing multi-layer (solid synthetic surfacing)	cast surfacing (solid synthetic surfacing)	calendared vulcanised, prefabricated sheets
Surface	granular texture	granules flat		strewn-in granules with visible tips			embossed texture
Top layer (coloured)	rubber granules and elastomer, sprayed	rubber granules and elastomer, trowelled in-situ or prefabricated		elastomer cast and rubber granules strewn-in			calendared co-vulcanised, differentiated layers of rubber compound
Base layer	rubber granules/fibres and elastomer, poured out in-situ or prefabricated		–	rubber granules/fibres and elastomer, poured-out in-situ or prefabricated	rubber granules and elastomer, cast		a top layer
Typical areas of application	athletics tracks and run up tracks, multi sports	multi-use areas, tennis courts and running/run-up tracks (school sports and combined facilities)	multi-sports	athletics tracks, run-up tracks			athletics tracks, run-up tracks, tennis courts

Table 3.1.1 - Examples of surfacing and fields of application
Source: EN 14877:2006 (E)

Some are fabricated on site by machine mixing and laying the raw material ingredients. Others are composites of these two systems. Each type has certain advantages and disadvantages.

Latex bound synthetic surfaces are available on the market but at present only one product meets IAAF tensile properties requirements. However, such surfacing

may be used for non-international competition and training facilities provided all the other IAAF performance requirements, particularly with regards to thickness, and the IAAF Rules are met.

The safety of athletes and their protection against injury in training and competition is of special significance for the requirements for the sports surface. Also ongoing maintenance of the surface is essential to protect the investment and ensure the safety of athletes. The specification and control of the synthetic surface technical data with constant monitoring during installation is paramount to ensuring the life of the surface and its satisfactory properties.

3.1.1.1 Prefabricated Sheet

This type of system is made from a rubber compound, processed by calendaring followed by curing and rolling. It is largely non-porous and has an embossed or textured surface finish to improve traction and slip resistance. Obviously by producing the surfacing material in the controlled conditions of a factory, its performance properties should be very uniform. Also because the thickness of the sheet can be controlled very accurately, possible problems due to thin areas on the completed facility are avoided. However, the installation of the material requires a high degree of skill and accuracy. The sheet must be bonded to the base of the track with adhesive. The butt joints must be soundly executed, both between adjacent sheets of surfacing and between the surface and the perimeter edges of the track or runway. The durability of the surface is only as good as the integrity of the bond between itself and the base. Furthermore the material will obviously conform to any contours and irregularities in the base to which it is bonded. It is therefore vitally important that the base fully conforms to the stipulated shallow gradients and levels requirements in order to avoid the formation of standing water.

The installation of this type of system involves the use of weather-sensitive adhesives, although the laying of all synthetic surfaces is to some extent a weather-dependent operation. Finally, all prefabricated sheet products can contain residual stress within the material. Should any movement occur within the sheet, after installation, the result will be shrinkage away from edges or at joints, or delamination of the surface from the base, or both. Correct selection and careful application of adhesive can help to minimise this problem.

Composite systems are also available in which a prefabricated base layer is delivered to site in roll form, bonded with adhesive to the base and then coated with a top layer mixed from raw materials and applied on site.

3.1.1.2 In-Situ Systems

The other main group of surfacing systems, comprises those products which are fabricated on site from their raw materials. The majority of outdoor tracks is surfaced with these systems. These may be sub-divided into three principal types: cast elastomers, resin-bound rubber crumb and composite systems.

For all such systems, the compatibility of the raw material ingredients is of vital importance. All reputable manufacturers and installers of in-situ prepared surfacing systems should ensure by constant monitoring and sample testing that each component does not have an adverse effect on another forming part of the same

surfacing product. It is advisable to have a consistent supply of each ingredient, and test data to confirm the performance of each combination.

Because the end properties of such systems are very dependent on the nature of the raw materials delivered to site, their mixing and laying, the operation of a comprehensive quality control scheme is a vital prerequisite to a satisfactory completed facility. All reputable installers willingly submit to independent quality monitoring by experienced test laboratories, and a number of the larger companies also operate their own "in-house" monitoring schemes.

3.1.1.2.1 Cast Elastomers

These products are laid as free-flowing liquid polyurethane. The cast polyurethane resin is prepared by mixing two components, one a liquid polyol and the other an isocyanate in the correct proportions. From this stage, there are two principal methods of installation. The first requires the addition to this mix of chopped rubber crumb to give a viscous liquid compound. This is then spread on to the base of the track by paving machine, to the full thickness required, which is controlled by screeding bars. The liquid resin mix is then given a textured finish by broadcasting specially formulated coloured EPDM rubber granules on to the surface and allowing the polyurethane to cure. Following cure, the excess surfacing granules are removed.

The second method involves the application of the mixed polyurethane resin to the track base by spreading to a lower thickness, typically 4mm, and broadcasting the chopped rubber crumb on to the uncured surface. After cure, the excess crumb is removed, and another layer applied in the same way. Following cure of this second layer, a third and final application is made, finishing with the broadcasting of the final coloured EPDM granule textured finish.

Obviously, the second method involves the application of more layers, and with each operation dependent on good weather, the possibility of delays to the installation are increased.

Some products utilise a different method of forming the upper surface texture. Instead of using partly embedded EPDM granules, the final cast polyurethane surface is allowed to cure to an appropriate consistency and then given a ‘stippled’ finish using a roller covered with a suitable material. The textured resin is then allowed to fully cure.

All cast elastomer systems are non-porous and hence it is of paramount importance that the stipulated gradients and levels requirements are met, otherwise water ponding may occur in "low" areas. The final surface is largely free from joints, and should adhere well to the base. Such surfaces are strong and durable, provided they are correctly formulated using compatible raw material ingredients, properly mixed and installed under satisfactory environmental conditions.

3.1.1.2.2 Resin-Bound Rubber Crumb

These products comprise a principal layer of polyurethane resin-bound rubber crumb, finished with a texturised surface coating of polyurethane paint. The crumb is mixed with a one-component moisture-curing polyurethane resin in the correct proportions. This very viscous mix is then spread by paving machine on to the base of the track, with the thickness controlled by screeding bars. After cure, two coats of a

coloured polyurethane paint containing a fine rubber aggregate, is spray applied to this rubber base mat, in order to give the finished surface the correct traction and slip resistance.

Because the polyurethane resin used in this type of system is moisture curing, their installation is slightly less weather-critical. Although it would not be sensible to attempt the operation in wet conditions, a shower of rain after the rubber base mat is laid will not prove detrimental, and indeed may actually accelerate the cure of the resin. However, the spray application of the texturising finishing coats requires not only dry conditions, but also low wind speeds.

These systems have many of the advantages of the cast elastomers, although it is recognised that they are less durable. One advantage is their porosity, which means that even areas slightly out-of-tolerance for levels, will not water pond.

In particularly high wear areas such as at the end of Javelin runways, at the High Jump take off point, and where the starting blocks are fixed, it is common to "reinforce" the surface with cast resin material, prior to spray applying the finishing coats. These systems probably comprise the most widely installed group of synthetic surfaces for athletics.

3.1.1.2.3 Composite Systems

As the name implies, these systems are a hybrid of the cast elastomer and the resin-bound rubber crumb products. They are sometimes known as "sandwich" or "double-decker" systems. They are formed from a base mat of resin-bound rubber crumb, typically about 9mm in thickness. After cure, the open textured mat is grouted with a very fine rubber crumb, and then a cast elastomer layer is applied as the top surface. The thickness of this cast layer can be increased to improve the durability of the surface and make it easier to repair by allowing the top of the surface to be ground off before re-topping with cast elastomer. The appearance of the finished facility is exactly as for a cast elastomer system, but the surfaces are obviously not as expensive because they utilise less of the expensive cast polyurethane resin.

The durability of these composite systems lies in between that of the two other in-situ systems above. The performance of the surface is similar to that of the cast elastomer systems except that the force reduction and the vertical deformation would tend to be slightly higher (softer) than the full depth cast resin products.

3.1.2 PERFORMANCE REQUIREMENTS

The requirements of a synthetic surface for an athletics track are two-fold:

- Is it effective as an athletics surface?
- Is it durable - that is will it retain its effectiveness over a reasonable period of time?

An athletics facility should meet these requirements at the time of a competition. However, it is obvious that surfaces must retain their characteristics in the long-term, both because of the need to ensure a wide network of good quality facilities around the world, and as a matter of commercial prudence on the part of the owners of the facilities. Synthetic surfaced athletics tracks represent a considerable financial investment and it is only natural that they should be put to the best possible use. This

means that their use for training purposes should be actively encouraged. To achieve a reasonable return on their investment, owners should expect the synthetic surface to last at least eight to ten years before requiring major repairs. Obviously the life of a surface is dependent on the level of usage.

3.1.2.1 Durability

The durability of synthetic surfaces relates to how well they withstand mechanical wear as well as their resistance to environmental factors. Outdoor athletics probably represents the most severe all-round test for synthetic surfaces. The surface must withstand the combined effects of compaction, abrasion, spike-damage, UV light, water, and variations in temperature. Indoor surfaces have somewhat less to contend with in that generally there would be no effects due to water and UV. It is hardly surprising that in the long-term synthetic surfaces do sustain mechanical damage and in addition they may discolour and they may change in resilience. Mechanical damage would mainly take the form of loss of texture from the surface layer, together with cutting from the athletes' spiked footwear. Obviously these effects would be most apparent in the heavily used areas such as the inside two lanes of the track, the end of the Javelin runways, the High Jump and the Pole Vault take off points. Loss of adhesion to the base or edge kerbings might occur, as might loss of adhesion between individual layers of multi-layer systems. This adhesion loss would result in delamination of the surface from the base or from itself.

All mechanical breakdown of the surface will be exacerbated by the influence of the environment to which the surface is exposed.

Examples of this "accentuation" of wear are:

- In colder climates, freeze/thaw cycling of entrapped water can have an adverse effect on the physical integrity of spike-damaged areas, can further weaken areas of surface delamination, and can have a generally debilitating effect on areas of a porous surface where through-drainage is not as good as it should be.
- In hotter climates, spike damage creates larger surface areas over which UV attack can occur. This can be further exacerbated in the case of composite surfaces such as sandwich systems and texturised paint coated resin-bound rubber crumb systems, by the fact that mechanical damage can often expose the lower layer of the surface. These lower layers may not necessarily have been formulated for prolonged exposure to weathering.
- Hot and high humidity environments can progressively weaken the bond between the synthetic surface and the base or edge kerbings.

Discolouration and changes in resilience, if they occurred at all, would tend to occur over the entire surface area of the facility. These were fairly common problems in the early life of the synthetic surfaces industry, in the late 1960's. However, modern formulations and the attention now paid by reputable manufacturers and installers of the raw materials to quality control, compatibility and consistency of the products, has meant that the synthetic surface is likely to retain its performance properties within reasonable limits, for its full anticipated service life.

Bubbling of the synthetic is often evidence of water penetrating under the synthetic surface. The point(s) of water penetration should be determined

immediately, eliminated and the damaged surface repaired to prevent further damage and also for athlete safety.

3.1.2.2 Effectiveness

The effectiveness of the surface is a matter of prime concern to all users of a facility. Certain performance requirements must be met if athletics is to take place on the surface with comfort and safety for the athletes.

These fundamental requirements have been laid down by the IAAF, and are as follows:

a) Imperfections

It is obvious that serious surface imperfections such as bubbles, fissures, delamination etc are unacceptable on grounds of safety and because of the effect they may have on durability and on dynamic performance of the surface. Wherever they occur, they must be rectified as a matter of priority.

b) Evenness

The very tight tolerances for overall gradients permitted by the IAAF are well known, because of the need to ensure that the slope of the surface gives no assistance to athletes. On a localised level, there shall be no bumps or depressions beneath a 4m straightedge exceeding 6mm, or beneath a 1m straightedge exceeding 3mm, at any position and in any direction. There shall be no step-like irregularities greater than 1mm in height, for instance at bay joints in in-situ surfaces or at seams in prefabricated sheet.

These limits are laid down not only to ensure safety for the athletes, but also to minimise standing water after rainfall, on non-porous surfaces. The presence of large areas of standing water, or of water ponding to any significant depth in key areas of the facility such as the High Jump take off point, can lead to serious delays in the scheduling of events. The possible effect of such delays on major international events which are being televised world-wide, can easily be imagined. Even for smaller national competitions, such delays can create severe difficulties for athletes, officials and spectators.

c) Thickness

The thickness of a synthetic surface is of fundamental importance to the characteristics exhibited by the surface. To a certain extent, the durability of the surface is dependent on its thickness, particularly with respect to mechanical wear.

It is also quite apparent that if the IAAF Rules permit athletes to use footwear with spikes of a certain length, the surface must be of a thickness which will be adequate to take that length of spike, plus an excess of thickness to allow for wear and weathering. It is obviously for this reason that certain areas on a facility, such as at the throwing end of the Javelin runway, and at the ends of other runways where an athlete plants his foot with considerable force and there is a greater impact on the athlete's legs, shall be of greater thickness than most areas of the synthetic surface. Not only do the longer spikes permitted for the High Jump and Javelin Throw, penetrate deeper into the surface, but the degree of damage which they inflict on the surface is that much greater (Figure 3.1.2.2 and Table 3.1.2.2).

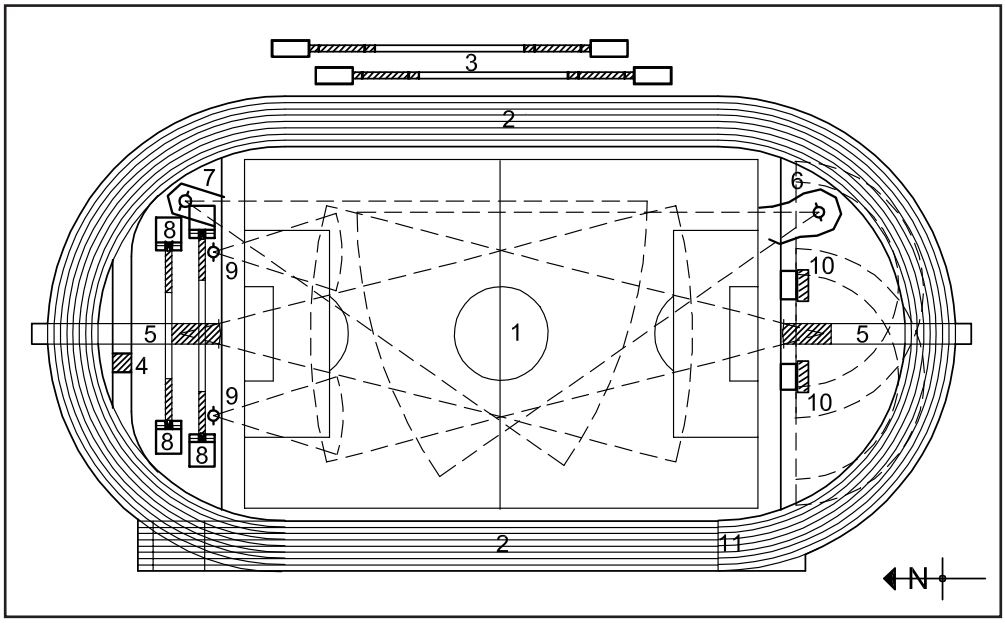

Figure 3.1.2.2 - Areas with thicker layers of synthetic surface (shaded)

1 Football pitch
2 Standard Track
3 Long jump and Triple Jump facility
4 Water jump
5 Javelin Throw facility
6 Discus and Hammer Throw facility
7 Discus Throw facility
8 Pole Vault facility
9 Shot Put facility
10 High Jump facility
11 Finish line

Runway	Thickness mm	Length
High Jump	20	Last 3m
Triple Jump	20	Last 13m
Pole Vault	20	Last 8m
Javelin Throw	20	Last 8m plus overrun
Steeplechase Water Jump	25	Water jump landing

Table 3.1.2.2 – Required thickening of synthetic surface

By far the most important reason why a minimum thickness must be stipulated is that the dynamic characteristics of the synthetic surface are critically dependent on its thickness. If the surface is too thin, its force reduction and deformation properties will be adversely affected, for example it will feel hard and unyielding to athletes. However, if it is over thick, the converse does not usually apply, that is it will not necessarily feel too soft and compliant. It is for this reason that it is not necessary to stipulate a maximum thickness of synthetic surface.

The thickness of the surface shall be determined to meet force reduction and vertical deformation requirements hereunder. The IAAF Product Certificate for a synthetic surface material indicates the absolute thickness at which a sample of the

material, tested in a laboratory at laboratory temperature, complied with the specifications in the IAAF Track Facilities Testing Protocols. The average absolute thickness laid will probably have to be greater to ensure that no in-situ test result will fail. The total area over which the absolute thickness falls more than 10% below the absolute thickness given in the IAAF Product Certificate for the material used shall not exceed 10% of the total surface area. The high stress areas with a deliberately thickened surface shall not be taken into account in computing these percentages. The IAAF website contains details of all IAAF Certified Products and the absolute thickness at which they meet the dynamic characteristics required by the IAAF. Note that force reduction and vertical deformation performance requirements take precedence over the thickness requirements. It is important to remember that the absolute thickness values quoted are not determined to the very top of the surface crumb or texture, but to a point somewhat below that as laid down in a precise method of test (3.1.3.3).

d) Force Reduction

The dynamic behaviour of athletics track surfaces is complex. Two of the major components of the interaction between an athlete and the surface are the deformation under load, or compliance, of the surface and the ability of the material to either absorb or reflect the energy of impact of the foot. Biomechanical studies over many years have confirmed the complexity of the foot / surface "model" and have revealed the extent of the variation in loading and duration of load between not only different sports, but different athletics events.

As has been explained elsewhere in this chapter it is possible to formulate synthetic surfaces which favour, or are more suitable for, one type of event against another. All current surfacing systems therefore represent a compromise between the various needs of the different athletics events.

The force reduction of the surface is measured using an "artificial athlete", in which an impact load is applied via a spring to a test foot with a spherical base resting on the synthetic surface. The foot is fitted with a force transducer, which enables the peak force during the impact event to be recorded. This peak force is compared with the result obtained on a rigid (concrete) floor, and the percentage force diminution calculated for the synthetic surface.

Force reduction, like all dynamic properties of elastomeric surfaces, is temperature dependent. Most major athletics competitions take place with a surface temperature in the range of 10° C to 40° C. The IAAF stipulates that the force reduction of the surface at any temperature within this range shall be between 35% and 50%.

It should be remembered that the force reduction values obtained on the synthetic surface might vary according to the type of base employed. Concrete is essentially a completely non-resilient base. However, the more commonly used bitumen-macadam or asphalt bases have a certain amount of compliance, and therefore might influence the force reduction of the surface laid above it.

The stipulated values are those for the installed facility. Where greater thicknesses of synthetic surface are installed, such as at the ends of runways, the force reduction values may fall outside the range quoted.

e) Vertical Deformation

Deformation is a second major component of the foot/surface interaction. If the deformation of the surface under foot load is too high, it represents a waste of kinetic energy and impairs the athlete's performance. In addition, high deformations lead to instability of the foot, especially for athletes running around bends. Conversely, if the surface deformation beneath the foot is too low, because of a very low compliance or because the synthetic surface is of inadequate thickness, then the deceleration forces experienced by the athlete's foot on impact with the surface will be high, and injuries might result.

Once again, therefore, it is necessary to arrive at a compromise range of values which will retain the advantages of a surface which stores and reflects energy imparted to it, without imposing excessive deceleration forces.

The vertical deformation of the surface is measured by another "artificial athlete" in which an impact load is applied via a spring to a test foot with a flat base resting on the synthetic surface. The foot is fitted with a force transducer, which enables the peak force during the impact event to be recorded. Simultaneously, the deformation of the test foot is measured by means of movement transducers mounted either side of the foot.

As for force reduction, the deformation of the surface will vary with temperature. Therefore the range of deformation values stipulated by the IAAF, of between 0.6mm and 2.5mm, is with the surface at any temperature between 10° C and 40° C. The comment about areas of greater thickness giving values outside the stipulated range, also applies for this parameter.

f) Friction

An important requirement of an athletics track is the need to ensure that no undesirable slip occurs between the surface and the athlete's foot. This requirement should be maintained irrespective of whether the surface is wet or dry. The correct friction value is achieved by giving the surface a textured or embossed finish. Friction is a characteristic of not just one surface but of two surfaces in contact. Because of the complications, which this fact introduces, it is normal for test measurements of friction to standardise on one particular type of foot on the test apparatus.

There are two widely used items of test equipment for the measurement of the frictional properties of athletics tracks. One is a pendulum device fitted with a spring-loaded foot shod with a standard grade of rubber. The other apparatus utilises a standard leather foot which operates under a fixed load and is allowed to rotate down on to the surface under test. Both tests yield a coefficient of dynamic friction, which the IAAF stipulates shall be no less than 0.5 under wet conditions. All synthetic athletics surfaces yield higher coefficient of friction values when dry than when wet, and so it is only necessary to specify a minimum under wet conditions.

g) Tensile Properties

The tensile strength and elongation at break of a synthetic surface is a vitally important "screening" test for surfaces, to ensure that the correct raw materials are used, in the correct proportions, properly laid, consolidated and cured.

The minimum values, which are stipulated, can be met by quality systems from reputable manufacturers and installers.

There are a number of situations in which a surface might fail to meet the requirements:

- If the rubber has not correctly cured such as for reasons of incorrect mixing or proportioning of raw materials, incompatibility of raw materials, or adverse weather conditions during the period allowed for cure.
- If the raw materials are substandard in any way, for instance if the rubber granules are incorrectly graded for particle size, if their source is inadequately controlled, or if the resin contains too high a proportion of inert filler.

Any of the above problems are likely to result in a surface, which might fail to meet certain other key performance requirements. Testing the completed facility could of course, identify such a failure. However, if the formulation is "adjusted" only to a lesser extent, the far more insidious situation might arise where the surface meets the dynamic requirements when newly completed, but deteriorates by mechanical wear and under the action of weathering, more rapidly than it should. The long-term effectiveness of the surface is therefore compromised.

Conducting tensile tests on samples of the surface should give a useful indication that its strength and likely durability are as they should be for that type of system. The minimum values stipulated by the IAAF for tensile strength are 0.5MPa for non-porous surfaces and 0.4MPa for porous surfaces. For all surfaces, the minimum elongation at break shall be 40%.

h) Colour

The actual colour of a synthetic surface for athletics is not important provided the line markings are easily discernible. In practice, most outdoor athletics tracks have red surfaces. If colour changes occur as a result of weathering of the surface, these should also be uniform. If they are not, for reasons perhaps of differing effects on different batches of the materials used, and hence on different areas of the facility, then it may be necessary to resurface the track.

There are a number of different assessment systems for colour. Most utilise some form of colour chart or series of colour cards or plates. Any system used for assessing colour must be capable of identifying and if necessary quantifying, the consistency of the colour of the surface over the facility.

i) Drainage

The very slight gradients, which are permitted for athletics facilities, make the shedding of water from non-porous surfaces difficult, although not impossible.

It has already been explained that the presence of large areas of standing water, or of small areas in key locations such as the High Jump take-off point, can seriously delay the schedule of a major competition. It is for this reason that the IAAF stipulates that when completely covered with water and allowed to drain for 20 minutes, there shall be no area of synthetic surface where the depth of residual water exceeds the texture depth of the surface. Porous surfaces should rarely give problems of this nature. If such problems do occur, they are invariably the result of either the excessive application of the texturised paint coating, or of inadequate porosity in the subbase

foundations for the facility or in the drainage system taking water away from the base construction.

3.1.3 TESTING

Systems developed for athletics tracks should always undergo a programme of laboratory testing before being introduced by manufacturers and installers. These tests would have the following principal aims:

- To ensure the compatibility of all the raw materials in the formulation
- To ensure that the system can be successfully installed in most normal climatic conditions
- To ensure that the surface has satisfactory durability
- To ensure that the performance characteristics of the surface are satisfactory for athletics
- To ensure that the formulation has no unsatisfactory environmental characteristics with respect to its raw materials ingredients, method of installation, or long-term performance

All of these aspects may be investigated by suitable laboratory tests. The likely durability can be predicted by accelerated tests for abrasion, spike resistance, compaction, the effects of UV, water and varying temperatures, etc. However, most of the tests, which have been developed will only assess one aspect of durability. In practice, of course, these surfaces deteriorate under the action of combined wear and environmental factors. For this reason, observations on actual installations of products, preferably several years old, are invaluable.

The performance of the surface for athletics is obviously of paramount concern to the IAAF, and the requirements, which they stipulate in this respect are detailed earlier in this Chapter. The precise methods by which an athletics track is tested for these various parameters is given below. It cannot be stressed too highly that the testing and investigation of these facilities is a very specialised activity, requiring complicated test apparatus and considerable experience in its use and the interpretation of the results generated. It is for this reason that the IAAF has enlisted the assistance of a network of test laboratories around the world, all suitably equipped and experienced in athletics track testing. The list of current IAAF accredited laboratories for testing synthetic track surfaces can be found on the IAAF website.

The best check of the quality of the finished track facility is to have an in-situ performance test undertaken by an IAAF accredited laboratory. Such a test is mandatory for a facility seeking an IAAF Class 1 certificate. Where an in-situ test is not being undertaken, it is recommended that for quality assurance purposes the surfacing installer is instructed to prepare control samples at the rate of one sample per 600m^2 of installed surface. The samples should be cast beside the track using the same materials and techniques. The absolute thickness of the samples should be the same thickness as listed on the IAAF Product Certificate for the synthetic material. The size of the samples should not be less than 600mm x 600mm. If the completed facility is undergoing full testing, the quality assurance samples should still be prepared to enable the tensile properties to be measured without the need to cut out areas of new surface. In this case, each sample size can be 300mm x 300mm.

3.1.3.1 Imperfections

Requirement

No surface imperfections such as bubbles, fissures, delamination, uncured areas etc., shall be acceptable.

Method

A thorough visual examination of all areas of synthetic surface should be conducted, and the positions and extent of all imperfections noted on a plan of the facility.

Where appropriate, photographs may be taken of any imperfections, in order to illustrate the test report.

Note: In some cases, uncured areas may not be identified until the thickness survey is undertaken (see 3.1.3.3). For instance uncured material might only be detected for the first time when a thickness probe is withdrawn from the surface and is found to be smeared with sticky resin. This may happen with multi-layer systems where one or more of the lower layers is uncured but the upper layer appears sound. It is important that the extent of any area of uncured material is fully identified.

3.1.3.2 Evenness

Requirement

The surface shall be installed so that on a localised level, there shall be no high spots or depressions beneath a 4m straightedge exceeding 6mm. Depressions beneath a 1m straightedge shall not exceed 3mm. There shall be no step-like irregularities greater than 1mm in height. Particular attention is to be paid to seams and joints in the surface. The intent is to ensure the safety of the athlete and provide an even running surface.

Method

Place the 4m straightedge on the surface over lanes 1-3 at 90° to the kerb and drag it around the entire circuit. Move it out to the next three lanes and repeat the drag around the entire circuit. For circuits with more than 6 lanes, continue until all lanes have been dragged. Turn the straightedge through 90°, place on the surface in lane 1 (parallel to the kerb) and drag it to the outer kerb. Move it along 4m and drag it back to the inner kerb. Move it along 4m and drag it back to the outer kerb. Repeat until the entire circuit has been dragged.

On runways, place the 4m straightedge on the surface parallel to the kerbs and in the centre of the runway and drag it from one end to the other.

On fan areas, drag the 4m straightedge across its width, move it along 4m and repeat the drag back across its width. Repeat again until the full width of the fan has been dragged. Repeat the entire process along its length.

Use continual visual observation to determine if a gap exists under the straightedge. Should a gap exist, verify that both ends of the straightedge rest on the surface, moving the straightedge if necessary, then use a calibrated wedge to determine the actual size of the gap.

The intention is that the entire area of surface should be dragged with the 4m straightedge. Placing the straightedge on a regular "grid" of individual locations is not an appropriate method for assessing the entire surface.

Whenever, during the 4m straightedge survey, a step-like or other irregularity is visually identified which gives a wedge reading below the maximum permitted, but which is considered to be likely to give a wedge reading above the 1m straightedge maximum, the 1m straightedge should be placed across the irregularity and its exact height measured using the calibrated wedge.

Any location where a gap is found exceeding the maximum permitted, is recorded on a plan of the facility. The record should also identify whether the deviation is a high spot or a depression.

Note: Sometimes in moving the straightedge slightly to find the maximum gap, it becomes clear that the irregularity is a high spot rather than a depression. In order to find the magnitude of the high spot, place the centre point of the 4m straightedge on the high spot and rotate the straightedge through 360° until the maximum gap is obtained under one end of the straightedge by pressing the other end down against the surface. Measure the gap beneath the elevated end of the straightedge and then divide this figure by two to give the magnitude of the high spot.

3.1.3.3 Thickness

Requirement

The durability of the surface and the safety of the athlete can be affected by the thickness of the surface. The use of spikes enhances this requirement for a minimum thickness. There will be specifically designed areas such as in the Javelin runway or other high stress areas where the safety of the athlete and the durability of the surface will dictate that the thickness be greater than the minimum. This additional thickness shall not affect the flatness of the surface.

The thickness of the surface shall be determined to meet force reduction and vertical deformation requirements hereunder. The IAAF Product Certificate for a synthetic surface material indicates the absolute thickness at which a sample of the material, tested in a laboratory, complied with the specifications in the IAAF Track Facilities Testing Protocols. The absolute thickness laid will probably have to be greater to ensure that no in-situ test result will fail. The total area over which the absolute thickness falls more than 10% below the absolute thickness given in the IAAF Product Certificate for the material used shall not exceed 10% of the total surface area. The high stress areas with a deliberately thickened surface shall not be taken into account in computing these percentages. Note that force reduction and vertical deformation performance requirements take precedence over the thickness requirements.

The absolute thickness shall not be determined to the top of the surface crumb or texture but by the method of test given below.

Method

A calibrated 3-prong depth-measuring probe is used to determine the overall thickness of the surface. Care must be taken not to penetrate the asphalt or bitumen-macadam base beneath the surface. The overall thickness is measured by starting at the finish line and taking sets of readings at 10m intervals around the circuit. The first set

of readings is to be taken in the even lanes (2, 4, 6, 8) and the next set in the odd lanes (1, 3, 5, 7), alternating between even and odd lanes every 10m around the circuit. Readings shall be taken in the centre of each lane. At the 110m start position on each straight, readings shall be taken in the centre of each lane. Runways including the steeplechase lane on the circuit shall be probed at 5m intervals centred along the length. The fan areas shall be probed at 5m intervals along parallel axes in two directions.

Where exceptionally thin areas are detected, additional probe readings shall be taken in all directions until an acceptable thickness is measured. An exceptionally thin section is defined as where the absolute thickness is less than 80% of the Product Certificate absolute thickness. The laboratory shall determine, depending on the extent of the exceptionally thin area, its location and the minimum thickness measured, whether to recommend that the area be cut out and reinstated to greater thickness. Additionally, the exact extent of over-thickness (reinforced) areas shall be determined by probe readings in the same way as above. All measurements taken are recorded (but see next paragraph) and the test points listed in the test report.

At a number of locations a core (15mm to 25mm in diameter) is removed and measured using the following method to determine absolute thickness. At least four cores shall be removed, but more than this number are required if the surface is thin over large areas. All core holes to be repaired immediately. The surface texture of the core is abraded with a grade 60 abrasive for approximately 50% of the surface area of the core. The thickness of the abraded area of the core is measured using a thickness gauge fitted with a 0.01mm accuracy dial, a plunger with a flat measuring surface of 4mm diameter and with a measurement force between 0.8N and 1.0N. The measurement is recorded to the nearest 0.1mm. The difference in thickness between the actual surface and the abraded surface is calculated and the difference deducted from all of the actual probe measurements. These amended figures are recorded as the absolute thickness of the surface for the purpose of the report.

3.1.3.4 Force Reduction

Requirement

The dynamic interaction between the athlete and the surface is significant to the performance and safety of the athlete. Therefore the ability of the surface to reduce force (absorb energy) is important. The force reduction shall be between 35% and 50%, at any surface temperature between 10°C and 40°C. If, at the time of measurement, the temperature of the surface is outside this range, it shall be permissible for the results obtained to be corrected for temperature, by interpolation from a graph of force reduction against temperature for the precise surfacing system installed, previously obtained by laboratory testing. If no graph is available then testing outside the surface temperature range shall not be undertaken.

Because of the fact that it is required to install greater thicknesses of synthetic surface at take-off areas and at the ends of runways, it is possible that results obtained in these areas may fall outside the above range.

Method

A full description of the apparatus and details of the method are given in EN 14808:2005, except that the low-pass filter shall have a 9th order Butterworth characteristic.

The 95% confidence limits of this method are calculated at plus or minus 1%.

At least one measurement shall be made for every 500m^2 of normal thickness synthetic surface, with a minimum of twelve (12) measurements over the facility. The test positions shall be as follows:

1. At the discretion# of the test laboratory in any lane around the first radius*
2. In the centre of lane 2 at the 130m mark on the back straight
3. In the centre of lane 5 at the 160m mark on the back straight
4. At the position of lowest thickness on the back straight*
5. At the discretion# of the test laboratory in any lane around the final radius*
6. In the centre of lane 1 at the 320m mark on the main straight
7. In the centre of lane 4 at the 350m mark on the main straight
8. In the centre of the outer lane at the 390m mark on the main straight
9. At the position of lowest thickness on the main straight*
10. At the discretion# of the test laboratory at any position (except the high-jump take-off point) over the semicircular area. Where there are two semicircular areas, a test shall be performed on each of them.
11. At the discretion# of the test laboratory at any position (except the reinforced areas) on each of the runways (Long Jump, Triple Jump, Pole Vault, Javelin Throw) and in the steeplechase lane.

#Whenever the selection of the test location is left at the discretion of the laboratory, that location must be close to the average thickness of the track as a whole.

**For the purposes of testing, the first radius is defined as 10m to 100m, the back straight as 110m to 200m, the final radius as 210m to 300m, and the main straight as 310m to 400m.*

If the area of synthetic surface is exceptionally large (for example 10- or 12-lane straights), any necessary additional tests shall be at locations selected by the test laboratory.

At each location, the temperature of the surface shall be measured with a needle temperature probe and recorded. Each test position shall be recorded on a plan of the facility with the results recorded in the report.

Note: If the surface temperature is outside the permitted range of 10°C to 40°C, temperature correction of the results may be employed on the basis of interpolation from laboratory results as described in the first paragraph. If no graph is available then testing outside the surface temperature range shall not be undertaken. However, it is sometimes possible to avoid the need for this, by conducting the testing at a different time of day. For instance, if the facility is in a hot region, testing early in the morning or in the evening can result in the surface temperature falling to within the above range.

3.1.3.5 Vertical Deformation

Requirement

The dynamic interaction between the athlete and the surface is significant to the performance and safety of the athlete. Therefore the ability of the surface to deform under load is important. Too high a deformation can affect the safety of the athlete through instability of the foot, while the inability of the surface to deform can cause injuries due to impact forces. The vertical deformation shall be between 0.6mm and

2.5mm, at any surface temperature between 10°C and 40°C. If, at the time of measurement, the temperature of the surface is outside this range, it shall be permissible for the results obtained to be corrected for temperature, by interpolation from a graph of vertical deformation against temperature for the precise surfacing system installed, previously obtained by laboratory testing.

Because of the fact that it is usual to install greater thicknesses of synthetic surface at take-off areas and at the ends of runways, it is possible that results obtained in these areas may fall outside the above range.

Method

A full description of the apparatus and details of the method are given in EN 14809: 2005.

The 95% confidence limits of this method are calculated at plus or minus 0.1mm.

At least one measurement shall be made for every 500m^2 of normal thickness synthetic surface, with a minimum of twelve (12) measurements over the facility. The test positions shall be as follows:

1. At the discretion# of the test laboratory in any lane around the first radius*
2. In the centre of lane 2 at the 130m mark on the back straight
3. In the centre of lane 5 at the 160m mark on the back straight
4. At the position of lowest thickness on the back straight*
5. At the discretion# of the test laboratory in any lane around the final radius*
6. In the centre of lane 1 at the 320m mark on the main straight
7. In the centre of lane 4 at the 350m mark on the main straight
8. In the centre of the outer lane at the 390m mark on the main straight
9. At the position of lowest thickness on the main straight*
10. At the discretion# of the test laboratory at any position (except the high-jump take-off point) over the semicircular area. Where there are two semicircular areas, a test shall be performed on each of them.
11. At the discretion# of the test laboratory at any position (except the reinforced areas) on each of the runways (Long Jump, Triple Jump, Pole Vault, Javelin Throw) and in the steeplechase lane.

#Whenever the selection of the test location is left at the discretion of the laboratory, that location must be close to the average thickness of the track as a whole.

*For the purposes of testing, the first radius is defined as 10m to 100m, the back straight as 110m to 200m, the final radius as 210m to 300m, and the main straight as 310m to 400m.

If the area of synthetic surface is exceptionally large (for example 10- or 12-lane straights), any necessary additional tests shall be at locations selected by the test laboratory.

At each location, the temperature of the surface shall be measured with a needle temperature probe and recorded. Each test position shall be recorded on a plan of the facility with the results recorded in the report.

Note: If the surface temperature is outside the permitted range of 10°C to 40°C, temperature correction of the results may be employed on the basis of interpolation from laboratory results as described in the first paragraph. If no graph is available then

testing outside the surface temperature range shall not be undertaken. However, it is sometimes possible to avoid the need for this, by conducting the testing at a different time of day. For instance, if the facility is in a hot region, testing early in the morning or in the evening can result in the surface temperature falling to within the above range.

3.1.3.6 Friction

Requirement

When measured using either the British Transport and Road Research Laboratory Portable Skid Resistance Tester or the apparatus and method described below, the synthetic surface friction shall be nowhere less than 0.5 when wet.

Note: This corresponds to a scale reading of 47 on the TRRL machine.

The test shall normally be undertaken in-situ but it is permissible in the case of prefabricated products for samples of the surface to be cut from rolls on site to be later tested in the laboratory.

Method

Two methods are considered suitable for measuring the friction of installed synthetic track surfacing.

Method "A" involves the use of the portable skid resistance tester illustrated in Figure 3.1.3.6a. A standard CEN rubber slider according to EN 13036-4, spring-loaded beneath a foot mounted on the end of a pendulum arm, is allowed to swing down

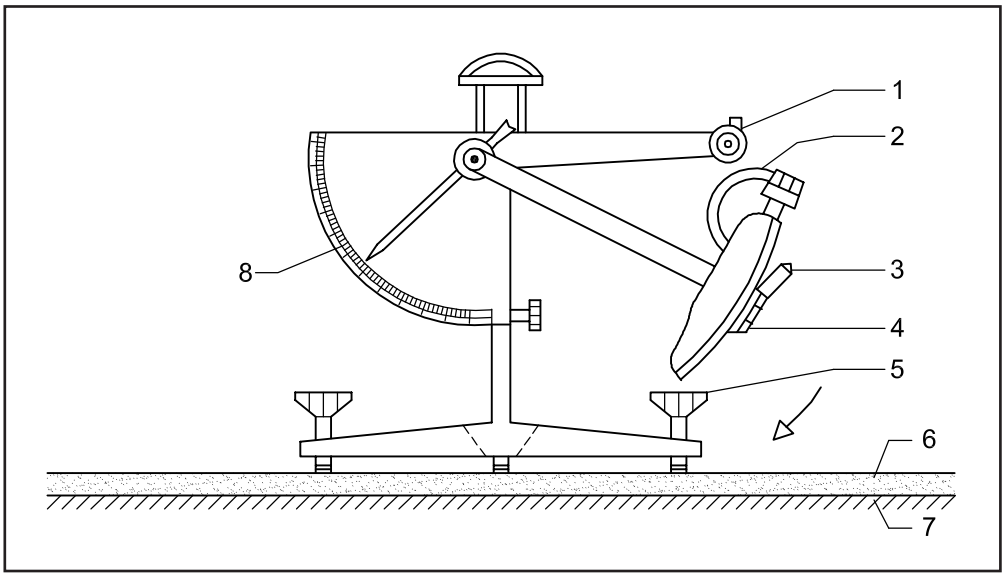

Figure 3.1.3.6a - Portable skid resistance tester (Friction Method A)

1 Release catch
2 Lifting handle
3 Pin F
4 Rubber slider
5 Foot of support
6 Synthetic surface
7 Base
8 Scale

from a fixed position at 90° to the surface, slide along the surface for a pre-set distance, and swing through taking a "lazy pointer" with it, which remains at the top of the swing against a fixed scale.

The apparatus is set level on the surface, with the legs supported on "spreader" plates to prevent localised deflection of the surface beneath the legs as the pendulum swings through its arc. The head is raised so that the pendulum swings clear of the surface. The arm is allowed to swing freely from its normal release position and the scale reading noted. If this is not zero, the friction rings are adjusted and the process repeated until a zero reading is consistently obtained.

Lower the arm and adjust the height setting until the slider just touches the surface, from one side of the vertical to the other side, a distance of between 125mm and 127mm. Lock the height setting in this position and re-check the distance of travel. Place the pendulum in the release position.

Flood the test area with clean water, release the pendulum and ignore the first reading. Release the pendulum five further times and record the scale reading obtained after each swing. Calculate the mean of all five readings. This is the wet result.

If the surface appears to have a directional pattern or texture, additional results should be obtained with the apparatus set in such a way that the slider traverses the same area of surface at 90° and at 180° to the original direction of travel used for the first set of readings.

Method "B" involves the use of the sliding test apparatus shown in Figure 3.1.3.6b. A vertical shaft of diameter 20mm is arranged in a frame, the lower part of which is designed as a threaded spindle (of pitch 12mm/turn). The shaft is guided at the top by a plain bearing and at the bottom by a ball bearing having a radial and axial action so that the shaft moves downwards when turned clockwise and upwards when turned anticlockwise. At the lower end of the shaft a test foot is mounted on a pivoted mound (ball joint) such that rotation of the shaft is transferred to the test foot.

The ball bearing is arranged in a bracket on the frame, so as to permit vertical movement of the ball bearing, downward movement being limited by a stop. A circular flange is fixed to the middle part of the shaft, on which weights can be placed. A constant torque is applied to the shaft by means of a steel wire wound on the shaft by means of a winding drum of 63mm diameter, and which runs over a guide pulley and is tensioned by a freely suspended 5kg weight. This torque drives the shaft.

The test foot contains a strain gauge or piezo-electric device for measuring the torque. The test foot consists of a lower and an upper part, between which the measurement sensors are arranged. The lower surface of the test foot has three skids, in the form of segments of a 100mm diameter, 20mm high, cylinder, arranged as shown. These skids are covered with leather which is finished with 100 grade abrasive paper (grinding procedure with the sliding direction).

The leather shall be old tanned with a Shore D hardness of 60 plus or minus 5. The leather skid soles should be 2mm thick.

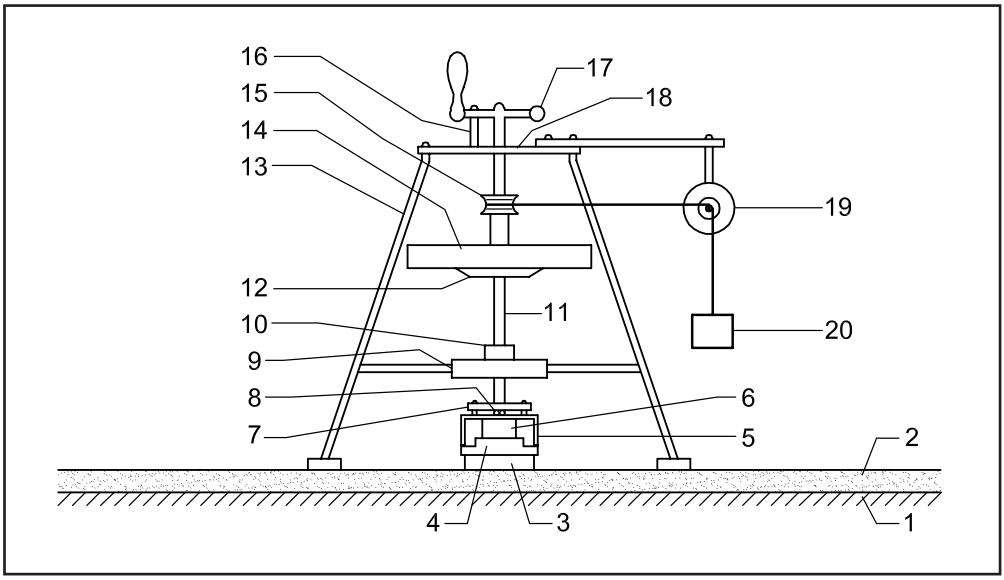

Figure 3.1.3.6b - Sliding resistance tester (Friction Method B)

1 Base	11 Threaded spindle
2 Synthetic surface	12 Support flange
3 Bottom plate	13 Frame
4 Lower part of test foot	14 Weights
5 Upper part of test foot	15 Winding drum
6 Electrical detector	16 Catch lever
7 Soft rubber disc	17 Handwheel
8 Ball joint	18 Plain bearing
9 Ball bearing holder	19 Potentiometer for measuring the speed of rotation
10 Ball bearing	20 Freely suspended weight

The weight and the polar moment of inertia of the shaft, of the weights and of the test foot, must be as follows:

weight = 20 plus or minus 1kg
moment = 3000 plus or minus 200kg cm^2

Required measurement range for torque is 0 to 4Nm with an accuracy of 0.5%

The synthetic surface is thoroughly wetted with clean water. The apparatus is placed on the synthetic surface, and the shaft is raised causing the steel wire to wind on to the drum. The shaft is then released so that the weights drive the shaft downwards. As the test sole contacts the surface, the rotation of the shaft is braked by the frictional resistance between the sole and the surface and this is measured as torque, which is continuously plotted with a recording device (Figure 3.1.3.6c).

The total weight of the shaft, weight and test foot is set to 20kg. The shaft is turned far enough upwards before the measurement to ensure that the test foot contacts the surfacing after one rotation. Three measurements are carried out at each test position, and the test sole and the surface must be cleaned of abraded material between each test.

The measurement plots consist of a curve of torque against time and a curve of normal load against time. To determine the coefficient of sliding friction, the friction resistance at the transition from the initial sliding to steady sliding is used. The sliding friction coefficient is determined from the friction resistance at the point of intersection as follows:

$$E = 0.30 \frac{D}{V}$$

where D = relevant friction resistance (N cm)
and V = normal force in N

In each case, the arithmetic mean is calculated from the three individual measurements made at each location. The results must be reported to two decimal places.

Using either method, at least one measurement should be made for every 1000m² of normal thickness synthetic surface, with a minimum of six measurements over the facility.

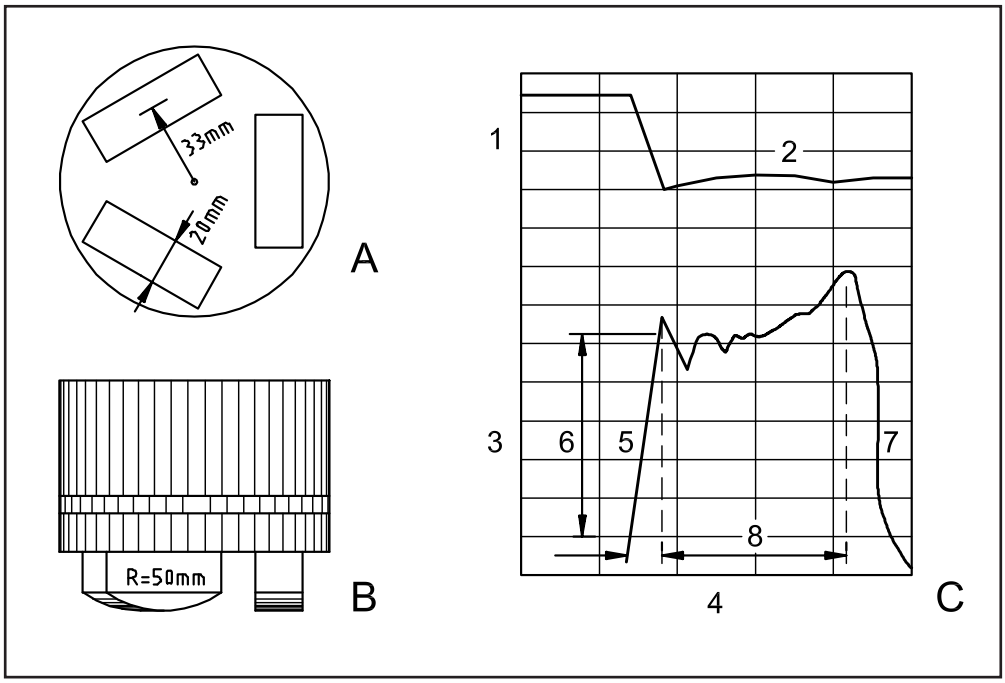

Figure 3.1.3.6c - Detail of test foot (Test Example)

A Bottom side of test foot
B View of test foot
C Example: Manner of representation of test results

1 Normal force in N
2 Sliding curve V
3 Torque in Ncm
4 Time in s
5 Initial sliding phase
6 Value used for determining μ
7 Sliding curve D
8 Constant sliding phase

The test positions shall be as follows:

1. At the discretion of the test laboratory in any lane around the first radius*
2. At the position of apparent lowest texture in any lane on the back straight*
3. At the discretion of the test laboratory in any lane around the final radius*
4. At the position of apparent lowest texture in lane 1 on the main straight*
5. At the discretion of the test laboratory at any position (except the High Jump take-off point) over the semicircular area. Where there are two semicircular areas, a test shall be performed on each of them
6. At the discretion of the test laboratory at any position on one of the runways

**For the purposes of testing, the first radius is defined as 10m to 100m, the back straight as 110m to 200m, the final radius as 210m to 300m, and the main straight as 310m to 400m.*

If the area of the facility is exceptionally large (for example 10- or 12-lane straights), any necessary additional tests shall be performed at locations selected by the test laboratory.

Each test location shall be marked on a plan of the facility with the results recorded in the report.

3.1.3.7 Tensile Properties

Requirement

When determined using the method described below, the synthetic surface shall have a minimum tensile strength of 0.5MPa for non-porous surfaces and 0.4MPa for porous surfaces. For all surfaces, the elongation at break shall be a minimum of 40%. The test shall be conducted on a minimum of four specimens and the result quoted is the average of the four results.

Method

In the case of newly installed tracks, it is sometimes acceptable to conduct this test on sample "trays" of synthetic surface prepared by the contractor as work proceeds, or in the case of prefabricated surfaces on samples cut from individual rolls of material on site. However, in the event of dispute or if the quality of the installed surfacing is suspect, samples must be taken from the track itself.

If it is necessary to cut samples of surfacing from the track for this test, these should obviously be removed, where possible, from non-critical areas of the facility such as run-outs at the ends of straights, at the corners of fan areas etc. In the event that samples must be removed from a specific location because a defect is suspected, these samples should be cut from a low-wear area within that location.

In the case of prefabricated products, it is recommended that samples are removed across a number of the bonded seams, in order that the strength of the bond can be assessed.

It may prove necessary to remove some of the wearing course of the macadam base, if a cohesive sample of the synthetic surface is to be obtained.

All areas from which samples have been removed, should be repaired immediately with fresh synthetic surfacing.

The tensile strength and elongation at break shall be determined on dumbbell bars stamped or cut from a full thickness sample of the surfacing. The shape of the

specimens shall be as shown in Figure 3.1.3.7 sample A, although specimens shaped as sample B may be used in some circumstances. The bars shall be conditioned at 23°C for 24 hours and then stretched at a constant strain rate of 100mm/minute until they break. A stress / strain curve may be plotted during the test.

In the case of synthetic surfacing formed with the use of single-component, moisture-curing polyurethanes, at least 14 days curing time should be allowed before conducting tensile strength tests. If such a system fails to meet the stipulated limits, repeat tests should be conducted on further samples after another 14 days, or after a period of accelerated curing in the laboratory.

Each test location shall be marked on a plan of the facility and the results obtained on samples from each location included in the test report.

3.1.3.8 Colour

Requirement

The evenness of the colour of the running surface assists in the concentration of the athlete and provides a focus in relation to the line and event markings. The colour must be consistent within the design of the surface and when fading occurs, this must occur evenly. The colour shall be uniform to within one position on the recognised colour reference card or plate system used. For deliberately designed multi-colour facilities each discrete colour shall be similarly uniform.

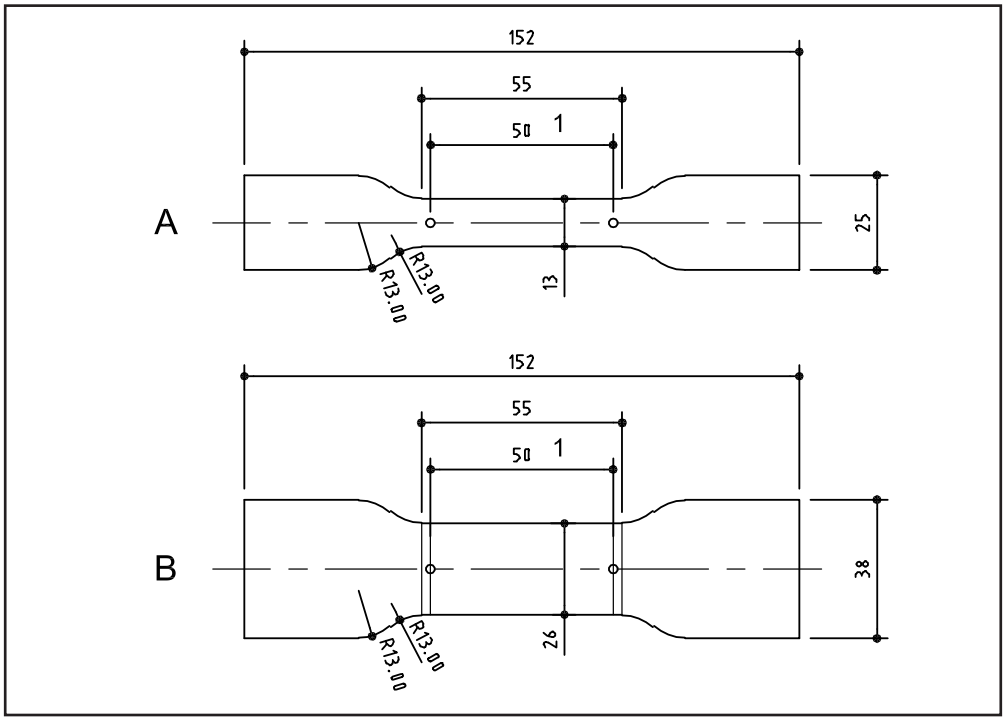

Figure 3.1.3.7 - Tensile specimens (Dimensions in mm)

Sample A
Sample B

1 Gauge length

Method

There are a number of different assessment systems for colour. Most utilise some form of colour chart or series of colour cards or plates. Any system used for assessing colour must be capable of identifying and if necessary quantifying, the consistency of the colour of the surface over the facility.

Areas of inconsistent colour shall be marked on a plan of the facility.

3.1.3.9 Drainage

Requirement

Water in excess of the height of the texture of the running surface can affect the safety and performance of the athlete. When completely covered with water and allowed to drain for 20 minutes, there shall be no area of synthetic surface where the depth of residual water exceeds the texture depth of the surface.

Method

The synthetic surface is flooded with water by any appropriate means and the 20 minutes is measured from the time the flooding stops. After that time, the surface is examined for standing water. Locations with standing water above the top of the surface texture of the synthetic surface are noted on a plan of the facility with the approximate square metres and the maximum depth of the water, and included in the report.

Note: It is sometimes difficult to deliver the necessary quantities of water to the surface, from a hose supply. In this event, it may be necessary to evaluate this parameter just after heavy rainfall, if at all possible. Alternatively, selective watering from a hose supply should be applied to those areas of the facility which are particularly susceptible to water run-off problems, such as the fan areas.

3.1.3.10 General

The above programme of testing is considered adequate for a facility in good condition. Where the surface is showing evidence of problems, it may be necessary to extend the testing to other areas, to increase the frequency of tests, or to modify the procedures employed to properly identify the nature and extent of the surfacing defects. These are matters best left to the professional judgement of an IAAF accredited test laboratory.

3.1.4 REPAIRS AND REFURBISHMENT

No facility lasts for ever, but it is entirely reasonable to expect the foundation of an athletics track to continue to function effectively over a time period that may encompass several replacements of the synthetic surface. To do this it is necessary to ensure that a very good standard of road construction is employed. The total depth of base necessary to ensure long-term stability of the finished track surface will depend upon the nature of the site on which it is to be built. It should be noted that, even on the most ideal site, a minimum of 150mm of free-draining aggregate below a minimum of 60mm bitumen / macadam will prove to be necessary. The macadam would typically comprise a base course 40mm to 60mm thick and a wearing course 25mm to 30mm thick. Great attention must be paid to the accuracy of the final

macadam layer because of the very strict requirements for surface flatness and minimum overall thickness of the synthetic surface.

It is recommended that a geotechnical survey of the ground conditions over the site is carried out at an early stage, and the results of such a survey should be made available to an independent consultant engineer in order that an adequate base to the track can be designed. It is important that, during construction, quality control of all aspects of the work is rigorously adopted. This should extend from the installation of the drainage system, through the entire project, to the application of the finished synthetic surface and line markings. The assistance of an independent, suitably experienced and competent test laboratory should be sought, in particular for the quality control of the synthetic surface and to conduct a comprehensive inspection of the finished facility in order to ensure compliance with the performance parameters. When selecting such a laboratory, the specialised requirements of this IAAF Specification must be carefully considered.

Any bubbles, tears or gouges in the synthetic surface should be professionally repaired as soon as possible firstly for the safety of the athletes but also to prevent accelerated deterioration of the surface.

After a number of years of use, typically somewhere between 5 and 12 years, it would be expected that an athletics surface would be in need of some repair, or even complete renovation if usage levels have been high. Naturally the extent of wear which the synthetic surface experiences will depend upon the degree and type of usage. Use levels vary enormously from one facility to another.

In the case of porous surfaces, wear will be most apparent as a loss of the textured surface coating, leading to the resin-bound rubber crumb base mat showing through and becoming more exposed to increased spike damage and weathering effects. Naturally this will first become apparent in the high wear areas of the track. If identified early enough, it may be possible to reduce the rate of further wear by the spray application of an additional textured paint coating. The areas to be repaired should be thoroughly cleaned and if necessary high pressure washed and allowed to dry before the application of further textured coating. If significant damage to the base mat has already occurred then at this stage it would be best to cut out all those damaged areas down to the bitumen/macadam and reinstate with fresh base mat before applying the new textured coating.

Non-porous systems tend to have a superior resistance to abrasive and spike wear. Composite systems with an upper surface of cast elastomer also have this characteristic, although once this upper layer is penetrated by spikes, wear occurs more rapidly in the underlying base mat than it would if the system was solid rubber. This is one of the reasons why a thickness of at least 4mm is preferable for the upper cast layer of a composite surface. When loss of texture has reached a point where the surface is in need of repair, the usual way of doing this is to grind off the upper rubber layer and granular texture and apply a fresh flood-coat layer of polyurethane resin with overcast granules in the usual way. If this is done on a patch repair basis it is inevitable that the appearance of the surface will be very noticeably different on the repaired areas compared to the existing surface. Eventually the time will come when the condition of the majority of the upper surface over the facility has deteriorated to the point where it is necessary to completely re-top all the synthetic surfacing. In this case the entire track surface down to a depth of

perhaps 3 or 4 mm would be ground off, and then a new flood-coat surface applied in the usual way. When applying overcoats of fresh poured resin, it is most important that a minimum thickness of new material is maintained otherwise delamination becomes a significant possibility. In order to avoid this potential problem of inter-layer delamination, any cast resin layer should be a minimum of 4mm thick.

For a composite system, such re-topping is also possible provided care is taken not to grind off so much of the upper surface that the base mat is exposed. Naturally the risk of this happening is much reduced if the originally installed upper cast layer is at least 4mm thick.

Not all repairs that are necessary will be due to wear. A surface may "harden" over a period of time to an extent where it no longer meets the dynamic properties laid down by the IAAF. In such a case, grinding off some of the thickness and over-topping with fresh surfacing may be an option. It is recommended that a trial area is installed first to demonstrate the acceptability of the technique in bringing the dynamic properties back within the specified range.

Another problem that can occur in tracks of some age is slight shrinkage of the synthetic surface away from the edge kerbing to leave a gap. If this occurs to any significant extent, the full thickness of the surface should be cut back from the kerb a minimum distance of 75mm and fresh material re-instated to full thickness after the application of a suitable primer to the kerb edgings.

Eventually the synthetic surface will have deteriorated to the point where patch repairs or a complete overcoat of cast resin or spray-applied textured paint are no longer adequate to bring the facility back into good condition. When this time comes it is necessary to undertake the complete removal of the old synthetic surface and its replacement with new. An adequate budget should always be allowed for such a major resurfacing operation, with a significant contingencies sum for possible extras. When removing the old synthetic surface it is quite likely that damage will be caused to the wearing layer of the underlying bitumen / macadam. If this occurs over large areas, it will be necessary to plane off the wearing course and reinstate with new before the replacement synthetic surface is installed. If much disturbance to the edge kerbings occurs during this operation, it may also be necessary to re-set these or to install new edge kerbings to the facility. The usual care must be taken during this process to ensure the maintenance of levels and gradients as specified by the IAAF. It is best to employ all the usual quality control and key stage checks during such an operation to ensure a successful job.

For renovation of synthetic surfaces, see also 7.2.1.9.

3.2 Foundation Requirements

The extremely strict tolerances for gradients and flatness which are stipulated by the IAAF, mean that the construction of an adequate foundation is of supreme importance. These tolerances are required to be met not only by the newly completed facility, but also over the life of the track. This life would be expected to extend over two or three times the expected life of the synthetic surface. That is, the base construction should be adequate for at least 25 or 30 years without showing signs of movement in the form of settlement or heave.

3.2.1 ESSENTIAL CRITERIA

The foundation to any synthetic surfaced athletics track should be designed to meet the following criteria:

- It should be capable of supporting and transmitting to the existing ground, the loads of all vehicles, plant, machines and materials to be used in the construction, without causing deformation of the site, or exceeding the ground-bearing capacity.
- It should be capable of supporting and transmitting all the loads on the surface from athletes and maintenance equipment, without permanent deformation of the surface.
- It should provide protection to the surface from the effects of ground water, subsoil ground movement and frost heave.
- It should ensure that water, whether rainwater or natural groundwater, will drain away freely, either into the subsoil, or into a drainage system.
- It must guarantee porosity to rainfall in excess of the heaviest likely rainstorm and ensure that no standing water remains on the track surface which could impair the use of the facility. Porous surfaces must permit such rainwater to seep away freely.
- It should contribute towards providing suitable performance characteristics of the surface, in respect of athlete / surface interaction.
- It should ensure that the above criteria are retained throughout the life of the installation.
- It should provide all the above at the most economical costs, in terms of initial capital outlay and subsequent maintenance costs.

3.2.2 FOUNDATION CONSTRUCTION TECHNIQUES

General

The basic construction for all foundations will be similar and may be likened to high quality road construction. The differences being in the overall thickness and nature of the layers of stone.

The procedure adopted for the foundation construction will normally consist of the following operations:

- Excavation to remove vegetable matter, soil, loose or frost susceptible material down to a firm, load-bearing strata.
- Rolling or other treatment, to identify any weak or soft spots which should be dug out and replaced with suitable compacted hard, non-degradable filling.
- On some subsoils, compaction only may be necessary.
- Drainage installation for subsoil or subbase, in accordance with sub-section 3.3.
- Laying and compacting of first stone base. A crushed, hard, frost-resisting layer of stone is the normal material, but clean crushed brick, concrete or clinker may be suitable. This layer should not exceed about 200mm thickness and if the subsoil is frost-resistant gravel, this may be the only stone layer required. It should be graded to falls and checked for accuracy of finished level within the tolerances specified.
- Laying and compacting second (and subsequent, if necessary) stone layer(s) as above, to provide total construction height of the unbound base layers.
- Blinding with small, angular crushed stone (sand or ash may be acceptable, depending on the wearing course).

- Laying and compacting bitumen-bound base and wearing courses. There are a number of alternative forms of wearing course on offer. The choice is determined in consultation with the surfacing installer, in the light of the particular synthetic surfacing system to be used. The bitumen binder in bituminous bases should be "straight run", unfluxed, unless the wearing course is intended to be left exposed for sufficient time to allow all solvents to evaporate.

A bitumen-bound two-layer build-up at least 60mm thick will be required, typically comprising a lower layer, 40 to 60mm thick, and an upper layer, 20 to 30mm thick. Great attention must be paid to the accuracy of the final layer because of the very strict requirements for surface flatness and gradients, and the requirements for minimum thickness of the synthetic surface. It is quite likely that, in order to achieve the required tolerances, corrective work to the final layer will be necessary. Time should be allowed for this in the construction programme.

Deliberations about Investigation of the Sub-soil

It is apparent from these criteria that the foundation in its precise construction and thickness is dependent upon the location. The ground conditions existing beneath each site must be accurately determined by means of a comprehensive geotechnical investigation. It is important to ascertain the strata at depths down to approx. 2.5m, the load bearing capacity of the soils, their shear strength and their permeability. Some of the tests necessary to generate this information must be conducted in the laboratory on samples removed from site. Certain tests need to be undertaken in-situ, at various depths below the surface. All sub-soil investigation should be undertaken at design stage, in advance of tender period and construction.

Summary

Because of the complexity of the topic, it is not possible to lay down comprehensive guidelines for the base foundation necessary. The considered judgement of experts in this field is necessary, for every new installation, in the light of the geotechnical information available. It is important to remember that the construction and tolerances required involve a good standard of road-making.

Even on the most ideal site, a minimum of 150mm of free-draining aggregate below a minimum of 60mm of bitumen/macadam will prove necessary. On less than ideal sites, a build-up of 400mm or 500mm is quite likely to be needed. In latitudes where winter temperatures below zero are regularly encountered, construction depths greater than this may be needed to avoid problems of frost "heave".

Due to the high cost, extremely troublesome sites, such as old landfill areas, should be avoided due to the risk of ground movements and the greater number of structural measures then needed to ensure stability.

3.3 Surface Drainage

3.3.1 GENERAL REMARKS

With the exception of the water needed for maintaining the grass of the turf surface infield, water is disruptive of sports training and competition facilities. Water in or on sports surfaces considerably alters the performance properties of the surface.

For example, on synthetic surfaces a hindrance may occur as a result of a kind of aquaplaning. The removal of any surface water from sports areas by means of a drainage system is therefore vital.

Surface water mainly accumulates from precipitation, such as rain, mist, dew and snow. In rare cases, which are mostly attributable to planning error, surface water may also be derived from extraneous sources originating from surface or ground and stratum water which develops from outside areas and has a hydraulic slope to the sports area. In this case, special measures have to be considered.

The surface water, which has to be removed, accumulates not only on the sports surface, but also in the spectator areas, adjacent traffic areas and on other neighbouring sports surfaces and ancillary areas.

Figure 3.3.1 shows the direction of flow of the surface water and indicates the discharge coefficients of the respective surfaces.

Generally, a distinction is drawn between the following systems of drainage:

- Drainage of the surface water into suitable intakes, such as gutters or individual inlet channels, which carry the water through drain pipes to the recipient
- Drainage of the water through the installation in the form of seepage water which is passed into a porous subsoil or carried through a draining system to the recipient

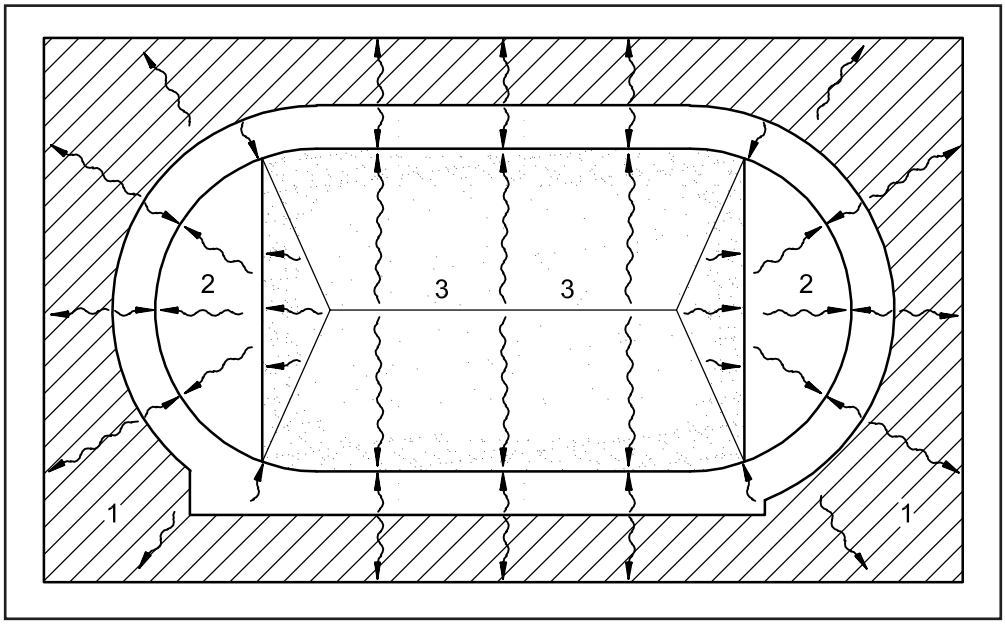

Figure 3.3.1 - Direction of flow of the surface water and discharge coefficients of the respective surfaces (in brackets)

1 Groundwater, vegetation areas (0.25), paved paths (0.60), asphalted paths (0.80), waterbound paths (0.30)
2 Unbound mineral surface (0.50), non-permeable synthetic surface (0.90), permeable synthetic surface (0.50), turf (0.25)
3 Turf (0.25), synthetic turf (0.60)

3.3.2 DEFINITIONS

3.3.2.1 Extraneous Water

Extraneous water is water which develops from outside areas in the form of surface or ground and stratum water and which has a hydraulic slope to the sports area. Extraneous water can be removed via drainage channels, ditches or gutters which catch the water before it reaches the sports area and divert it to a recipient.

3.3.2.2 Recipient

The recipient is an existing body of water, the drainage network or a draining well.

3.3.2.3 Water Outlet

An outlet is a structural component responsible for collecting the surface water and discharging it into a drain. This may be in the following forms:

- Gutter constructions such as running track surrounds designed as hollow sections
- Individual inlet channels within the running track surrounds
- Open gutters

3.3.2.4 Ring Mains / Collection Lines

Ring mains or collection lines are pipelines comprising closed (watertight) pipes or part-perforated pipes which collect the water from the outlets and the drain pipes in the sports ground and carry it off to a recipient.

3.3.3 REQUIREMENTS AND CONSTRUCTION

3.3.3.1 Track Surround Gutters

(covered or in the form of hollow section gutters)

Surround gutters are installed in lengths of 33m to 35m and connected to the collection line via 6 to 8 feed boxes. The feed boxes should be fitted with sand traps. The feed boxes usually have a length of 0.5m and must have the same width as the cover of the intake gutter.

If the water enters these gutters from the top, the slit must have a width of at least 10mm but no more than 15mm. If the water enters from the side, the slit width must be at least 10mm but no more than 25mm. Such gutters are mostly polyester hollow section gutters. They have removable covers and they usually have a cross section of 125mm. They are designed as mirror-gradient gutters.

If the top edge of the gutter cover does not lie flush with the adjoining surface, the free edge must be rounded off with a radius of at least 20mm, to prevent accidents. When installing drainage gutters as track surrounds, the dimensional requirements of the track border must be complied with.

Figures 3.3.3.1a and 3.3.3.1e show examples of gutters between the track and the grassed field (a and b), the track and segment with track surround (c) and without (d), and the design of a feed box (e).

Surround gutters are usually laid in a concrete foundation (compressive strength 15 N/mm^2 minimum). The thickness beneath the gutters must be at least 200mm and the requisite back supports must be at least 80mm thick.

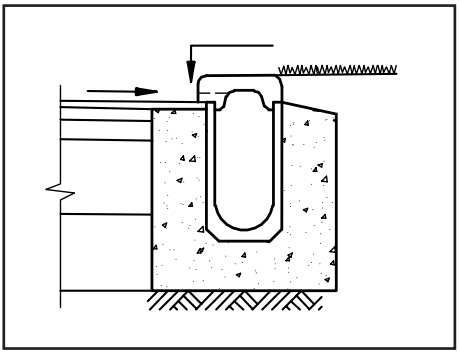

Figure 3.3.3.1a - Example of a gutter fed from one side

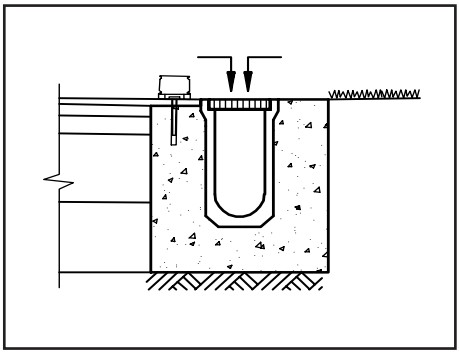

Figure 3.3.3.1b - Example of a gutter fed from above with a top-mounted kerb

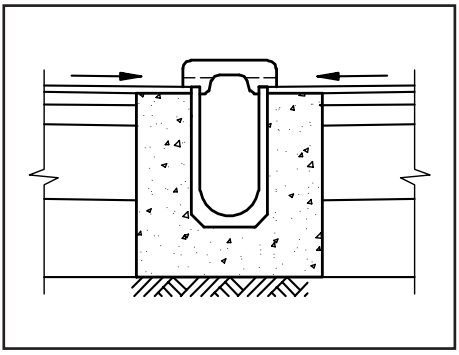

Figure 3.3.3.1c - Example of a gutter fed from two sides

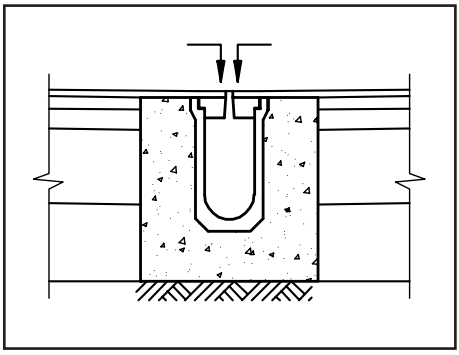

Figure 3.3.3.1d - Example of a gutter fed from above

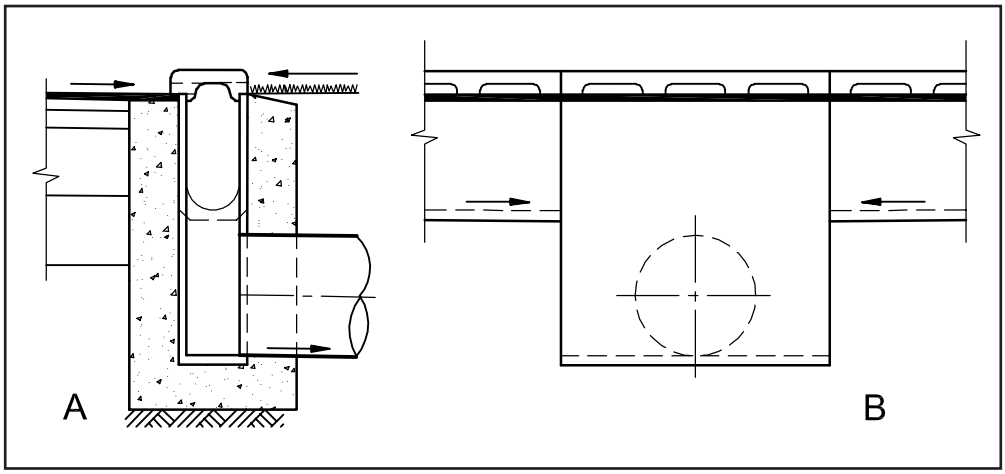

Figure 3.3.3.1e - Example of a feed box with a gutter fed from two sides and connected to a drain line

A Cross section
B Longitudinal section

The required discharge from gutters is determined by the formula:

$$D_r = 0.012 \times G_g$$

where D_r = required discharge in l/s

G_g = gathering ground of the gutter up to the gutter discharge in m^2

The required cross-section of the gutter for discharging is determined for gutters without bed slopes by the formula:

$$CS_r = 18 \times D_r$$

For gutters with bed slopes by the formula:

$$CS_r = 1.5 \times \frac{D_r}{\sqrt{BS}}$$

where CS_r = required cross-section for the type of gutter selected at the end of the gutter track (before the gutter discharge) in $0.01m^2$

BS = bed slope

The absorption capacity of feed boxes is determined by the formula:

$$A_c = 0.15 \times T_{cs}$$

where A_c = absorption capacity of the gutter discharge in l/s

T_{cs} = narrowest throughflow cross-section of the discharge in $0.0001m^2$

3.3.3.2 Individual Inlet Channels Within Track Surrounds

If individual inlet channels are used, they are usually inserted in the track surround of the running track. They are connected to the ring main and must be fitted with a sand trap.

The slit height of the individual inlet channels must be at least 10mm, but no more than 25mm. The water intake surfaces must be at least $0.001m^2$. On non-porous synthetic surfaces, the distance between the individual inlet channels must not exceed 2.5m, and for porous synthetic surfaces and unbound mineral surfaces must be no more than 5.5m. The individual inlet channels (Figures 3.3.3.2.a and 3.3.3.2b) are made of polyester concrete or metal which are inserted as hollow section gutters into a concrete bedding.

Individual inlet channels have not proved successful for competition tracks.

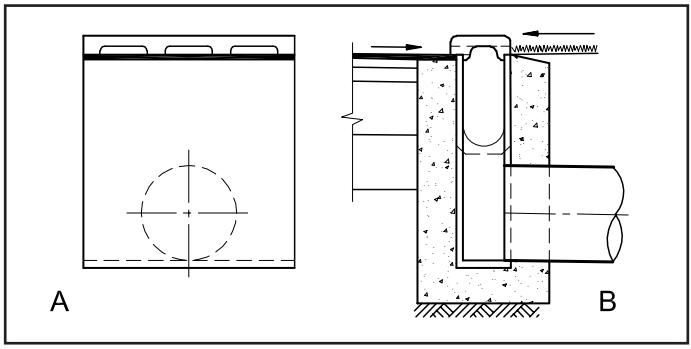

Figure 3.3.3.2a
Individual inlet channel fed from two sides
A Cross section
B Longitudinal section

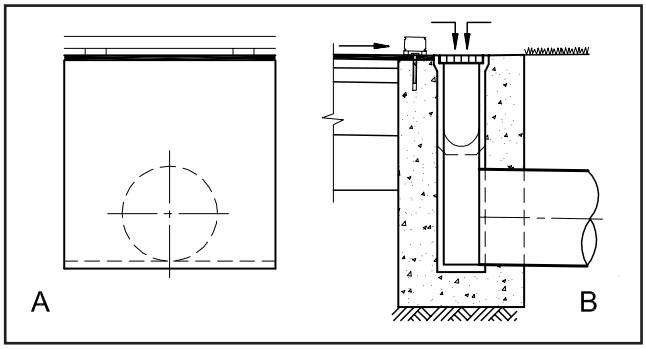

Figure 3.3.3.2b
Individual inlet channel fed from above and top-mounted kerb
A Cross section
B Longitudinal section

3.3.3.3 Open Gutters

Open gutters are used for surface water drainage of ancillary areas (Figures 3.3.3.3a to 3.3.3.3c). They are open channels and are made of concrete or concrete polyester. These gutters are fitted with drains in the form of individual inlet channels or feed boxes at fixed intervals.

The gutters are inserted as surround gutters in the concrete bedding.

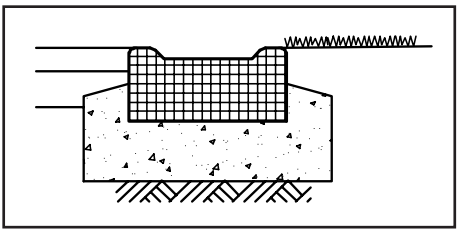

Figure 3.3.3.3a - Open gutter made of concrete or polyester concrete

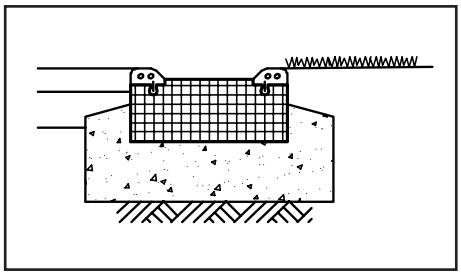

Figure 3.3.3.3b - Open gutter, bordered by rubber or plastic edging

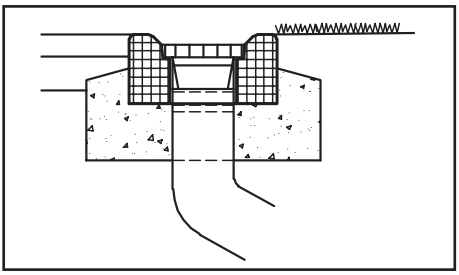

Figure 3.3.3.3c - Discharge of an open gutter with a sand trap

3.3.3.4 Ring Mains / Collection Lines

They consist of:

- Enclosed pipes made of plastic, concrete or reinforced concrete with a minimum velocity of 0.5m/s and a maximum of 3m/s or
- Drain pipes, mainly in the form of part-perforated pipes with a closed bottom.

When using such types of pipe for the ring main, the calculation of the pipe diameter is based on the assumption that there will be a 50% reduction of the total water supply due to the accumulation of water in the drain.

Ring mains designed to carry off surface water must have a minimum gradient of 0.3% and a maximum of 0.5+%. For their construction, the recommendations given in Section 3.4 should be followed.

3.3.4 CALCULATION AND DESIGN

3.3.4.1 Hydraulic Dimensioning of the Surface Water Drainage System

The quantity of water which needs to be carried off depends on:

- The estimated level of rainfall which may vary greatly owing to local precipitation conditions, but as a norm 120 litres per second per hectare (l/s/ha) can be assumed.
- The discharge coefficient Psi (ψ) which depends on the running track surface (porous or non-porous) and on the type of adjacent sports surfaces as far as rain water is discharged onto the track area.
- The type of adjacent traffic areas when these have any effect on the drainage of water from the track.
- The adjacent ancillary areas when water is discharged from these onto the track area.

The discharge coefficients can be incorporated into the calculation of the total quantities of water to be discharged as follows:

- Synthetic surfaces, non-porous	0.9
- Synthetic surfaces, porous	0.5
- Unbound mineral surfaces	0.5
- Synthetic turf surfaces	0.5
- Natural turf surfaces	0.25
- Paths, paved	0.6
- Paths, water bound	0.3
- Paths, asphalted	0.8

3.3.4.2 Pipe Cross-Sections

To calculate the pipe widths for draining surface water, the discharge coefficients under 3.3.4.1 are referred to. The estimated rainfall r is taken as 120 l/s/ha. The area being drained is given as F (m^2). However, the drainage of surface water from adjacent paths is only permissible if the path width does not exceed 2.50m. Otherwise special drainage installations have to be provided and calculated for separately.

Tables 3.3.4.2a and 3.3.4.2b indicate the necessary pipe cross sections for the determination of ring mains for draining the water supplied by the feed boxes relative to the chosen bed slope.

3.3.4.3 Surface Water Drainage Systems

Running Track

Figure 3.3.4.3a shows the slope and the direction of drainage from the outer edge of the track to the drainage gutters on the inside.

Pipe Diameter mm	Bed Slope					Type of Pipe
	1.0 % 1:100	0.75 % 1:133	0.50 % 1:200	0.40 % 1:250	0.33 % 1:300	
65	1.47	1.28	1.04	0.93	0.81	D
80	2.56	2.21	1.81	1.62	1.40	D/PP
100	4.64	4.02	3.28	2.94	2.54	D/PP
125	8.42	7.30	5.95	5.32	4.61	D
150	13.68	11.87	9.68	8.66	7.50	PP
160	16.25	14.09	11.49	10.29	8.91	D
200	29.47	25.56	20.84	18.64	16.15	D/PP
250	53.44	46.34	37.79	33.80	29.27	PP

D= Drainage pipe
PP= Part-perforated pipe

Table 3.3.4.2a - Discharge volume (l/s) of drainage pipes / part-perforated pipes

Pipe Diameter mm	Bed Slope						
	1.0% 1:100	0.66% 1:150	0.50% 1:200	0.40% 1:250	0.36% 1:275	0.33% 1:300	0.30% 1:333
100	5.11	4.17	3.61	3.23	3.08	2.95	2.80
125	9.26	7.56	6.56	5.85	5.58	5.34	5.07
150	15.05	12.29	10.64	9.52	9.08	8.69	8.25
200	32.42	26.47	22.92	20.50	19.55	18.72	17.77
250	58.78	47.99	41.56	37.18	35.45	33.94	32.21
300	95.58	78.04	67.59	60.45	57.64	55.18	52.38
350	144.18	117.72	101.95	91.19	86.94	83.24	79.01
400	205.85	168.08	145.56	130.19	124.13	118.85	112.80

Table 3.3.4.2b - Discharge volume (l/s) of closed pipes

Segment

The discharge of the surface water from the segments to the inside of the track can be seen in Figure 3.3.4.3b. In this figure, a, b, c and d refer to the gutter types described in Section 3.3.3.1.

Water Jump

Figure 3.3.4.3c shows the connection of the water jump to the drainage system. The outlet made of cast iron or plastic pipe (diameter 100mm) is controlled by a slide valve.

Landing Areas for Long and Triple Jump

The drain situated in the middle of the landing area receives, via the drainage layer beneath, the surface water from the surrounding grid (Figure 3.3.4.3d).

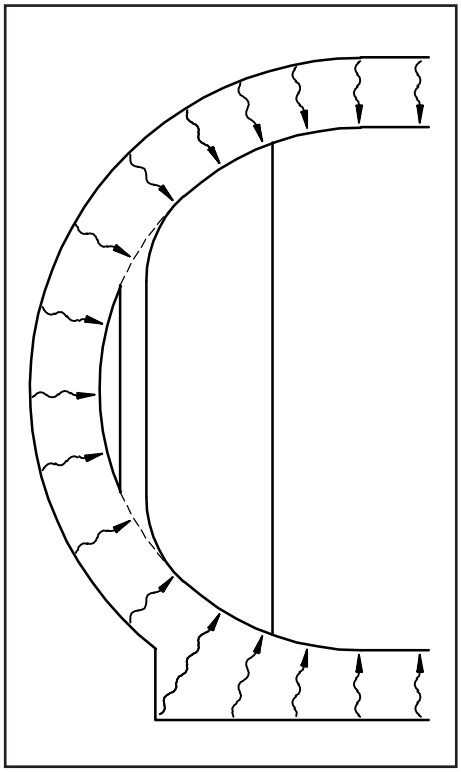

Figure 3.3.4.3a - Slope and direction from outer edge of the track to the drainage gutters

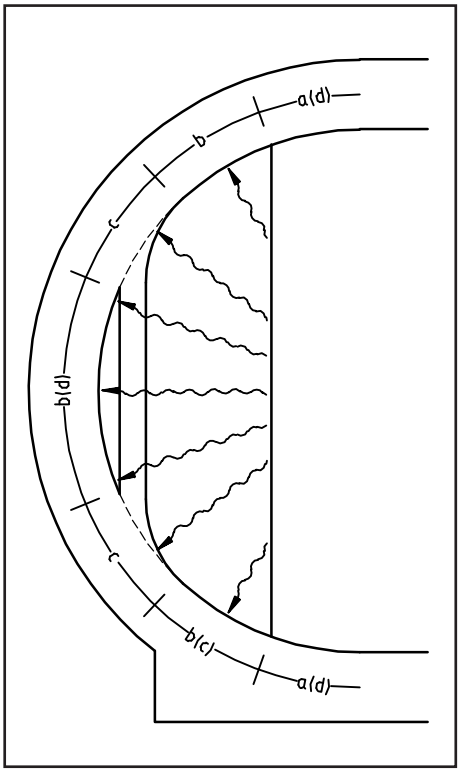

Figure 3.3.4.3b - Drainage of a segment

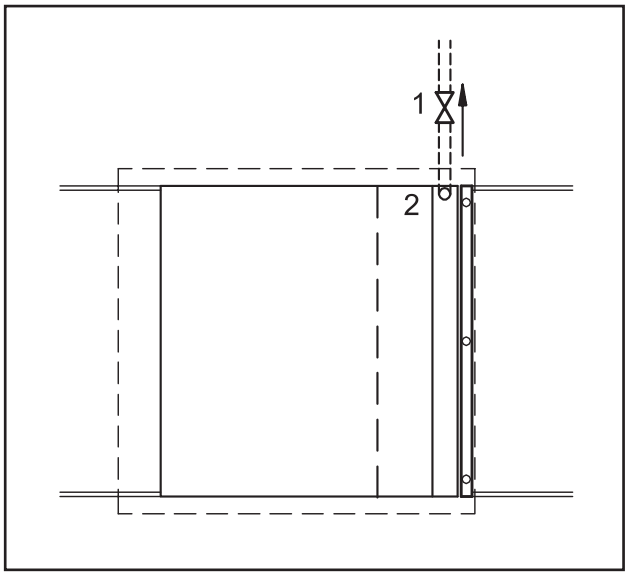

Figure 3.3.4.3c
Draining the water jump pit

1 Stop-cock
2 Discharge pipe
(cast or synthetic)

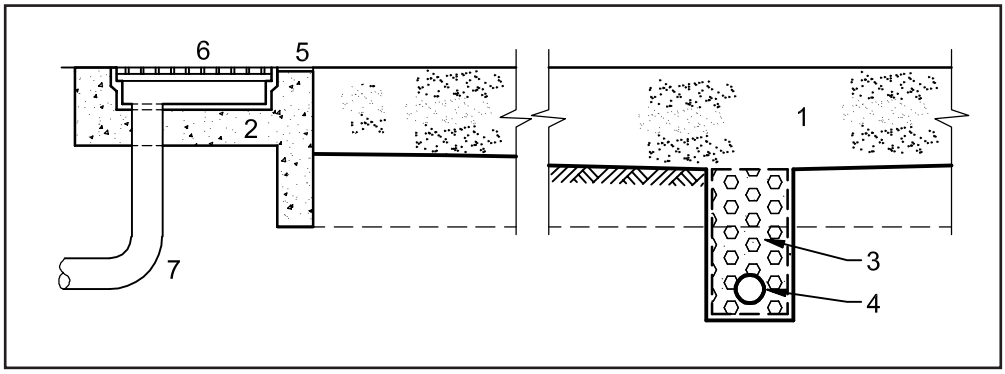

Figure 3.3.4.3d - Draining Long and Triple Jump pits and adjacent sand scraping grid
(Cross Section)

1 Sand
2 Concrete
3 Drainage layer
4 Drainage ditch and drain pipe
5 Soft protective surround
6 Sand scraping grid
7 Cast or synthetic pipe

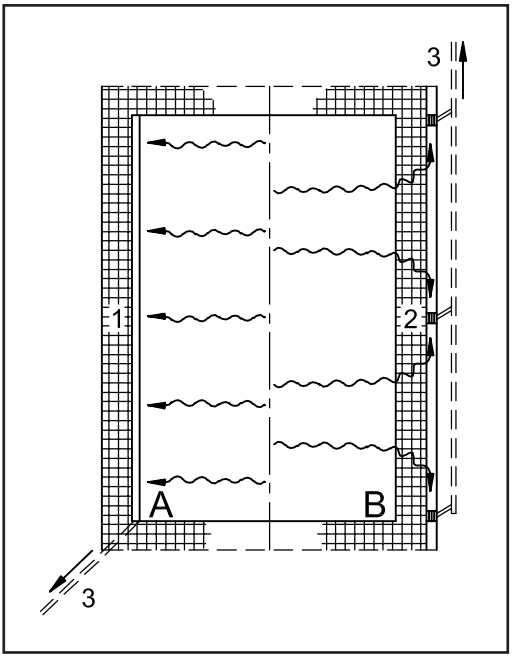

Figure 3.3.4.3e - Alternative drainage methods for landing areas for Javelin, Discus, Hammer, Shot Put

A Drainage system with gutter covered with grid
B Drainage system with open gutter and gulleys

1 Paved passage with grid gutter
2 Paved passage with open gutter
3 Seepage line (canal)

Landing Areas for Field Events

Figure 3.3.4.3e shows the two alternative drainage methods for the Javelin, Discus, Hammer Throw and Shot Put landing areas at a training facility. Along the left-hand side is a gutter with a slit-type grid whilst along the right-hand side the water is collected in an open gutter and discharged via outlets.

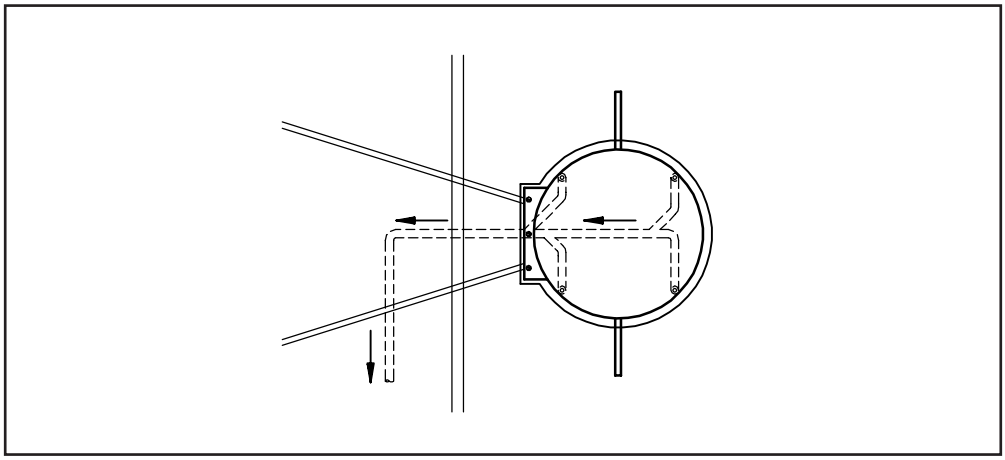

Figure 3.3.4.3f - Drainage of Shot Put circle
(also applies to Discus and Hammer)

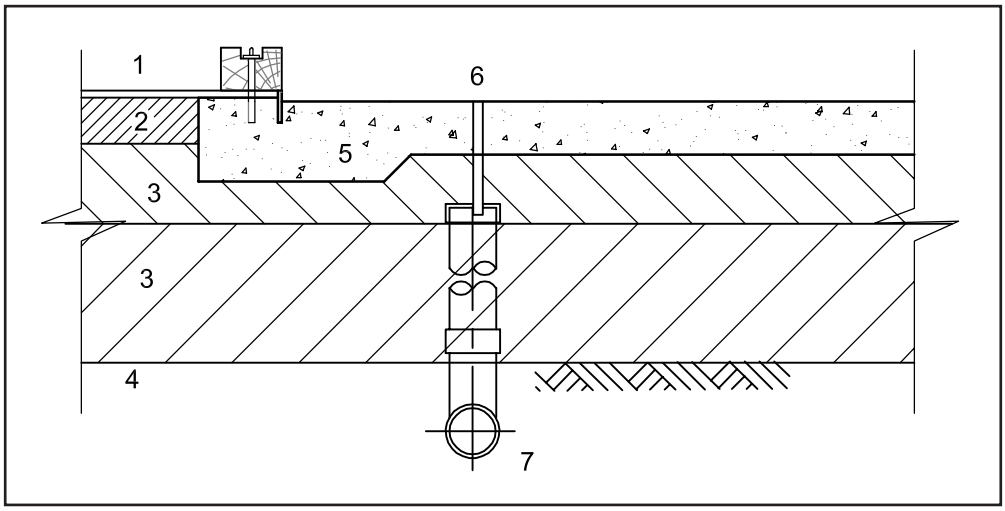

Figure 3.3.4.3g - Drainage of Shot Put circle (also applies to Discus and Hammer) (Cross Section)

1 Synthetic surface
2 Asphaltic concrete
3 Gravel base layer
4 Subgrade
5 Concrete base
6 Drainage hole
7 Drain pipe

Shot Put Circle

The floor plan and cross section in 3.3.4.3f show the drainage of a Shot Put circle which also applies to Discus and Hammer circles. The 3 outlets in the concrete slab are connected to the drainage system by means of drain pipes (diameter 65mm).

3.3.5 DESIGN EXAMPLES

3.3.5.1 Standard Track with 8 Lanes, Infield (Turf), with Spectator Facilities

This example shows the calculation of the pipe diameter of the draining installations for a stadium facility with an 8-lane track which is enclosed by a surrounding path and a grandstand. Figure 3.3.5.1 shows the individual areas being drained (1 to 88), the open ring mains (collection lines) closed mains, the drainage gutters between the field and track with their feed boxes, inspections shafts and directions of discharge (slope directions).

Table 3.3.5.1 shows the respective calculations.

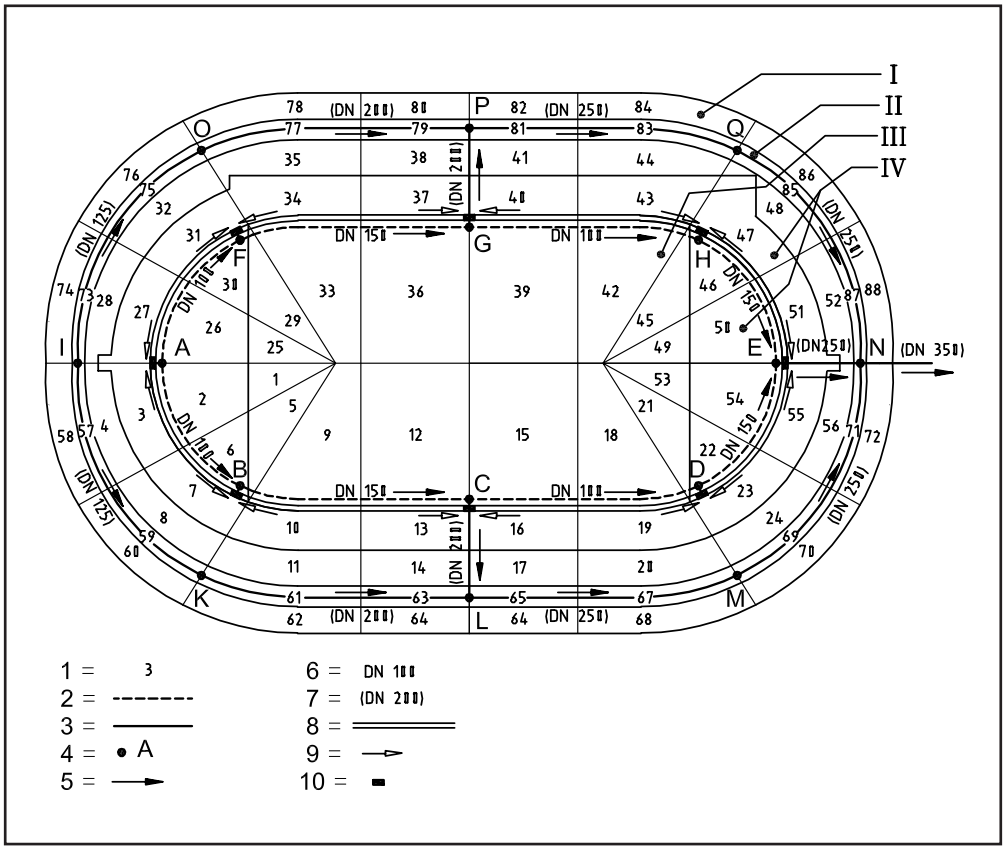

Figure 3.3.5.1 - Example for drainage calculation of the infield of a competition facility (see also table 3.3.5.1)

I Grandstand
II Surrounding path
III Grassed area
IV Synthetic surfaced area

1 Individual areas being drained
2 Ring main (collection line)
3 Closed main
4 Inspection shaft,
5 Direction of ring main discharge, closed main
6 Pipe diameter for seepage lines
7 Pipe diameter for closed pipelines
8 Drainage gutter
9 Direction of gutter discharge
10 Feed box

Surface Area Number	Surface Area m²	Discharge Coefficient	Discharge Volume (l/s)			Bed Slope %	Ring Mains Section	Pipe Diameter mm
			Surface Part	Gutter Segment	Reduced Volume*			
1	120	0.25	0.4					
2	405	0.90	4.4					
3	245	0.90	2.6					
4	240	0.25	0.7					
			8.1	8.1	4.1	0.5	A - B	100
5	300	0.25	0.9					
6	200	0.90	2.2					
7	245	0.90	2.6					
8	240	0.25	0.7					
9	565	0.25	1.7					
10	305	0.90	3.3					
11	260	0.50	1.6					
			13.0	21.1	10.6	0.5	B - C	150
12	980	0.25	2.9					
13	272	0.90	3.0					
14	240	0.50	1.4					
15	980	0.25	2.9					
16	275	0.90	3.0					
17	240	0.50	1.4					
			14.6	35.7	17.9	0.5	C - L	200
18	565	0.25	1.7					
19	305	0.90	3.3					
20	260	0.50	1.6					
21	300	0.25	0.9					
22	200	0.90	2.2					
23	245	0.90	3.0					
24	240	0.25	0.7					
			13.4	13.4	6.7	0.5	C - E	150
25	120	0.25	0.4					
26	405	0.90	4.4					
27	245	0.90	2.6					
28	240	0.25	0.7					
			8.1	8.1	4.1	0.5	A - F	100
29	300	0.25	0.9					
30	200	0.90	2.2					
31	260	0.90	2.8					
32	240	0.25	0.7					
33	565	0.25	1.7					
34	300	0.90	3.2					
35	260	0.25	0.8					
			12.3	20.4	10.2	0.5	F - G	150
36	980	0.25	2.9					
37	275	0.90	3.0					
38	240	0.50	1.4					
39	980	0.25	2.9					
40	275	0.90	3.0					
41	240	0.50	1.4					
			14.6	35.0	17.5	0.5	G - P	200

** When calculating the diameter of drainage pipes, the cumulative discharge volume of the gutter segment will be reduced by 50%.*

Table 3.3.5.1 - Calculation example in respect of Fig 3.3.5.1

Surface Area Number	Surface Area m²	Discharge Coefficient	Discharge Volume (l/s)			Bed Slope %	Ring Mains Section	Pipe Diameter mm
			Surface Part	Gutter Segment	Reduced Volume*			
42	565	0.25	1.7					
43	300	0.90	3.2					
44	260	0.50	1.6					
45	300	0.25	0.9					
46	200	0.90	2.2					
47	260	0.90	2.8					
48	240	0.25	0.7					
			13.1	13.1	6.6	0.5	H - E	150
49	120	0.25	0.4					
50	405	0.90	4.4					
51	245	0.90	2.6					
52	240	0.25	0.7					
53	120	0.25	0.4					
54	405	0.90	4.4					
55	245	0.90	2.6					
56	240	0.25	0.7					
			16.2	26.4	13.2			
18/27					6.7			
42/48					6.6			
					26.5	0.5	E - N	250
57	80	0.60	0.6					
58	205	0.90	2.2					
59	80	0.60	0.6					
60	205	0.90	2.2					
			5.6		5.6	0.5	I - K	125
61	100	0.60	0.7					
62	250	0.90	2.7					
63	70	0.60	0.5					
64	170	0.90	1.8					
			5.7		11.3	0.5	K - L	200
01/17			17.9					
65	70	0.60	0.5					
66	170	0.90	1.8					
67	100	0.60	0.7					
68	250	0.90	2.7					
			23.6		34.9	0.5	L - M	250
69	80	0.60	0.6					
70	205	0.90	2.2					
71	80	0.60	0.6					
72	205	0.90	2.2					
			5.6		40.5	0.5	M - N	250
73	80	0.60	0.6					
74	210	0.90	2.3					
75	80	0.60	0.6					
76	210	0.90	2.3					
			5.8		5.8	0.5	I - O	125

** When calculating the diameter of drainage pipes, the cumulative discharge volume of the gutter segment will be reduced by 50%.*

Table 3.3.5.1 - Continuation 1

Surface Area Number	Surface Area m²	Discharge Coefficient	Discharge Volume (l/s)			Bed Slope %	Ring Mains Section	Pipe Diameter mm
			Surface Part	Gutter Segment	Reduced Volume*			
77	195	0.60	1.4					
78	250	0.90	2.7					
79	145	0.60	1.0					
80	170	0.60	1.8					
			6.9		12.7	0.5	O - P	200
25/41		17.5						
81	145	0.60	1.0					
82	170	0.90	1.8					
83	195	0.60	1.4					
84	250	0.90	2.7					
			24.4		37.1	0.5	P - Q	250
85	90	0.60	0.6					
86	210	0.90	2.3					
87	90	0.60	0.6					
88	210	0.90	2.3					
			5.8		42.9	0.5	Q - N	250
M/N					40.5			
Q/N					42.9			
E/N					26.5			
					109.9	0.5	Recipient	350

** When calculating the diameter of drainage pipes, the cumulative discharge volume of the gutter segment will be reduced by 50%.*

Table 3.3.5.1 - Continuation 2

3.3.5.2 Standard Track with 6 Lanes, Infield (Turf), with 2.50m Wide Surrounding Path

This example shows the calculation of the pipe diameter of the drainage installations for a training and warm-up facility with a 6-lane track which is enclosed by a surrounding path. Figure 3.3.5.2 shows the individual areas being drained (1 to 54), the open ring mains (collection lines), closed mains, the drainage gutters between the field and track with their feed boxes, inspections shafts and directions of discharge (slope directions).

Table 3.3.5.2 shows the respective calculations.

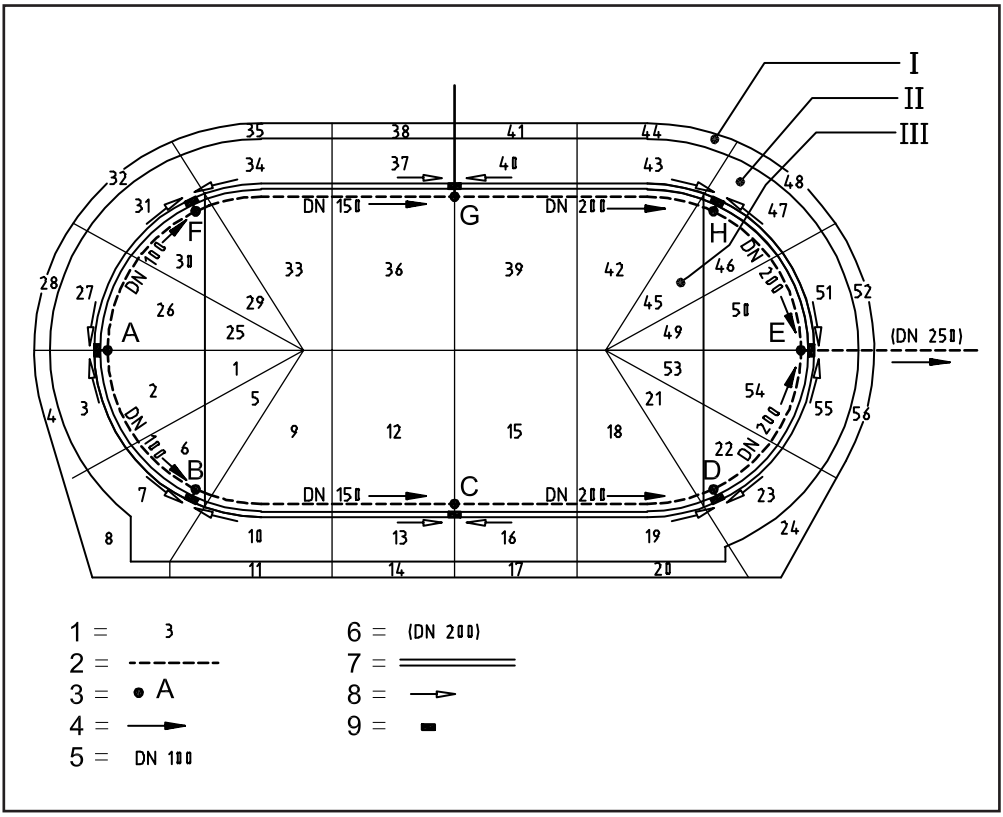

Figure 3.3.5.2 - Example for drainage calculation of the infield of a training and warm-up facility (see also table 3.3.5.2)

I Surrounding path
II Synthetic surfaced area
III Grassed area

1 Individual areas being drained
2 Ring main (collection line)
3 Inspection shaft
4 Direction of ring main discharge
5 Pipe diameter for seepage lines
6 Pipe diameter for closed pipelines
7 Surround gutter
8 Direction of gutter discharge
9 Feed box

Surface Area Number	Surface Area m²	Discharge Coefficient	Discharge Volume (l/s)			Bed Slope %	Ring Mains Section	Pipe Diameter mm
			Surface Part	Gutter Segment	Reduced Volume*			
1	120	0.25	0.4					
2	405	0.50	2.4					
3	135	0.50	0.8					
4	50	0.60	0.4					
			4.0	4.0	2.0	0.3	A - B	100
5	300	0.25	0.9					
6	200	0.50	1.2					
7	280	0.50	1.7					
8	180	0.60	1.3					
9	565	0.25	1.7					
10	280	0.50	1.7					
11	90	0.60	0.6					
			9.1	13.1	6.6	0.3	B - C	150
12	980	0.25	2.9					
13	260	0.50	1.6					
14	70	0.60	0.5					
15	980	0.25	2.9					
16	260	0.50	1.6					
17	70	0.60	0.5					
			10.0	23.1	11.6	0.3	C - D	200
18	565	0.25	1.7					
19	260	0.50	1.6					
20	90	0.60	0.6					
21	300	0.25	0.9					
22	200	0.50	1.2					
23	280	0.50	1.7					
24	180	0.60	1.3					
			9.0	32.1	16.1	0.3	D - E	200
25	120	0.25	0.4					
26	405	0.50	2.4					
27	135	0.50	0.8					
28	50	0.60	0.4					
			4.0	4.0	2.0	0.3	A - F	100
29	300	0.25	0.9					
30	200	0.50	1.2					
31	245	0.60	1.5					
32	60	0.60	0.4					
33	565	0.25	1.7					
34	235	0.50	1.4					
35	80	0.60	0.6					
			7.7	11.7	5.9	0.3	F - G	150
36	980	0.25	2.9					
37	200	0.50	1.2					
38	70	0.60	0.5					
39	980	0.25	2.9					
40	200	0.50	1.2					
41	70	0.60	0.5					
			9.2	20.9	10.5	0.3	G - H	200

** When calculating the diameter of drainage pipes, the cumulative discharge volume of the gutter segment will be reduced by 50%.*

Table 3.3.5.2 - Calculation example in respect of Fig 3.3.5.2

Surface Area Number	Surface Area m²	Discharge Coefficient	Discharge Volume (l/s)			Bed Slope %	Ring Mains Section	Pipe Diameter mm
			Surface Part	Gutter Segment	Reduced Volume*			
42	565	0.25	1.7					
43	235	0.50	1.4					
44	80	0.60	0.6					
45	300	0.25	0.9					
46	200	0.50	1.2					
47	245	0.50	1.5					
48	65	0.60	0.5					
			7.8	28.7	14.4	0.3	H - E	200
49	120	0.25	0.4					
50	405	0.50	2.4					
51	135	0.50	0.8					
52	50	0.60	0.4					
53	120	0.25	0.4					
54	405	0.50	2.4					
55	135	0.50	0.8					
56	50	0.60	0.4					
			8.0	8.0	4.0			
					16.1			
01/24					14.4			
25/48								
					34.5	0.5	Recipient	250

** When calculating the diameter of drainage pipes, the cumulative discharge volume of the gutter segment will be reduced by 50%.*

Table 3.3.5.2 - Continuation

3.4 Ground Drainage

3.4.1 GENERAL REMARKS

The ground drainage of running tracks and other athletics facilities includes drainage of the surface located above it. When draining the top surface, the water which has infiltrated by seepage (seepage water) is collected and, on impermeable ground, is fed through drainage channels to the recipient (See 3.4.2.6). In the case of porous ground, the seepage water is carried off into lower layers of the ground. The ground must be drained so that the load-carrying ability can be maintained. Penetrating stratum water is also carried away to the recipient through the ground drainage system.

For ecological reasons, the possibility of seeping the surplus water which accumulates from the sports areas on site instead of into the sewage system should always be checked. This will only be possible if the ground has a seepage capability. If the gathering grounds are sufficiently large, the installation of a cistern is recommended.

The drainage system usually consists of a surface drain comprising a porous, unbound base layer of gravel and crushed stones and drainage channels which carry the surplus water to the recipient.

3.4.2 DEFINITIONS

3.4.2.1 Surface Drains

A surface drain is the unbound base layer of the surface which absorbs seepage loss water through its cavities and carries it on to the nearest drainage channel.

3.4.2.2 Drainage Channels

A drainage channel consists of a ditch, drain pipes and drain filling. It absorbs the surplus water from the surface and the substrate or substructure and carries it off to the recipient.

3.4.2.3 Drain Filling

Drain filling is the filling used for the ditch. It is made up of mineral mixtures which are highly permeable to water.

3.4.2.4 Catch Water Drain

A catch water drain absorbs the seepage water from the top surface and the water outlets and feeds it to the recipient. Catch water drains have water permeable sides. They may be used as flexible pipes with or without filter casing or as rods with closed flumes (part-perforated pipes). Catch water drains without filter casings are normally used for athletics facilities if the drain fillings have stable filters.

3.4.2.5 Closed Pipes

Closed pipes take in the water from the catch water drains and carry it to the recipient. The sides are impermeable to water.

3.4.2.6 Recipient

The recipient is an existing body of water, the drainage network or a draining well.

3.4.2.7 Inspection Shaft, Deposit Shaft, Draining Well

An inspection shaft is a shaft construction with a closed bottom. This is located at the same height as the supply and discharge pipeline.

A deposit shaft is installed at the transition between catch water drain and closed pipelines. It has a closed bottom which lies at least 0.50m below the bottom of the discharge pipe.

On ground with a seepage capability, a seepage shaft permits quantities of water to trickle away from the catch water drain. It has an open porous bottom and a porous pipe casing in the area of seepage.

3.4.3 REQUIREMENTS AND CONSTRUCTION

3.4.3.1 Surface Drains

Surface drains consisting of unbound base layers must have a minimum water absorption rate of 0.0001m/s. Otherwise, the recommendations given in Chapter 3 (Track construction) relating to the quality of the building materials should be followed.

3.4.3.2 Drainage Channels

Drainage channels must be laid at right angles to the gradient of the soil plane.

If running tracks are more than 5m wide, they are located in the centre of the track.

The bed width of the ditch must be at least the diameter of the pipe and be spaced at a distance of 70mm from the ditch wall. The width is determined by the formula:

$$b = d + 2 \times 70$$

where

b = bed width
d = diameter of the pipe

The distance between drainage channels depends on the local precipitation and the water permeability of the ground, but should be between 6.0m and 7.0m. However, if the ground-water level has to be lowered, it may be advisable to reduce the distance between them.

Catch water drains should be made of plastic. They must have a water intake area of more than 250m^2/m. The minimum gradient is 0.3% and the maximum 0.5%.

Care must be taken to ensure that no fine particles are washed in with the intake of surface water. A regular cleansing of the pipes is essential.

The catch water drains must be covered up to the soil plane with drain filling materials of at least 0.20m.

The drain filling must be sufficiently permeable to prevent any water build up infiltrating from the layer above. The water absorption rate has to be higher than 0.0001m/s. Mineral mixtures used for building materials must be frost-resistant and have a grain size of between 0.06mm and 32mm. 8/32 grain mixtures have the advantage over the latter in that they are resistant to subsidence and are not affected by frost.

3.4.3.3 Closed Pipelines

The size of the closed pipelines must be calculated so that a flow rate of 0.5m/s is guaranteed and a maximum velocity of 3m/s is not exceeded. The pipes should be made of plastic, concrete or reinforced concrete.

3.4.3.4 Inspection Shaft, Deposit Shaft, Draining Well

An inspection shaft must be placed along the course of drain collection lines and closed pipelines, spaced not more than 110m apart and at any point where there is a change in gradient or direction. The shaft bottom must be furnished with a flume. Inspection shafts must be man-sized and have a minimum diameter of 1000mm. They must be fitted with stirrups if the depth so requires.

A deposit shaft has a similar construction to an inspection shaft, but the bottom of the deposit shaft lies at least 0.50m below the base of the discharge pipe.

A draining well must have a diameter of between 1000mm and 2500mm depending on the amount of seepage water. It contains a filter packing capable of seeping the water.

Covers for inspection and deposit shafts and for draining wells must be designed flush with the adjacent areas. Where shafts are arranged within safety zones of adjoining playing fields, they must be covered by a soft surface if they are not located below the top surface (blind shafts).

3.4.4 CALCULATION AND DESIGN

3.4.4.1 Hydraulic Dimensioning of the Ground Drainage System

If pipelines are to be used simultaneously for carrying off surface water, then the formulae given in Section 3.3.4.2 are to be used.

If only seepage water from the top surface or ground and stratum water has to be carried away, hydraulic calculations are not needed due to the comparatively small area of gathering ground of sports facilities. The following pipe diameters have proved adequate:

- Drainage channels within the sports areas (suction)	65mm
- Collection lines, ring mains for carrying off volumes of water from playing field drainage channels for a sports area of up to 3500m^2	100mm
- Collection lines, ring mains for carrying off volumes of water from playing field drainage channels for a sports area of between 3501m^2 and 5000m^2	125mm
- Collection lines, ring mains for carrying off volumes of water from playing field drainage channels for a sports area of between 5001m^2 to 7500m^2	150mm
- Collection lines, ring mains for carrying off volumes of water from playing field drainage channels for a sports area of between 7501m^2 and 15,000m^2	200mm

3.5 Watering of Sports Surfaces

The water supply for sports surfaces has the task of ensuring the growth of grass if the sports surface is turfed, cleaning synthetic surfaces and throwing circles, wetting landing area sand and filling steeplechase water jump pit. Quick-release hose points shall be located around the arena, adjacent to the throwing circles, landing area sand pits and steeplechase water jump pit.

Sports surfaces can be irrigated from above (sprinkling) or below (capillary irrigation), for example from the underlying layers. In the case of irrigation from above, the water is pressurised and applied to the surface by sprinklers. In the case of underground irrigation, the water is accumulated in a sealed reservoir from which it seeps by capillary action through the substructure to the layers requiring the water:

- The root zone of the grass surface
- The dynamic layer and surface of the unbound mineral surface

The latter system is not suitable for watering artificial grass surfaces. For sports surfaces, preference should be given to sprinkling, preferably with stationary systems using pop-up sprinklers.

Non-stationary irrigation systems are also used where the water is supplied to the sprinkler along temporarily laid feed lines in the form of hoses or connectable metal pipes laid above ground. The sprinklers are attached to tripods to the temporarily laid pipes or to a mobile undercarriage driven by a hydraulic motor, pulled across the surface by a rope.

The water can be taken from the mains supply, natural water sources (rivers, streams, ponds, lakes) or from the water table (See 3.5.5). In certain circumstances, water for industrial use can be used.

3.5.1 REQUIREMENTS OF SPRINKLER SYSTEMS

3.5.1.1 Uniform Distribution

A sprinkler system should ensure a uniform water distribution of ± 50% of the water required for the growth of grass and the consistency of the sports surface.

Uniform distribution is affected by wind and pressure conditions. Such effects can be lessened by positioning the sprinklers closer together.

3.5.1.2 Sprinkling Periods

Sprinkler systems must supply the necessary quantity of water in a period of 12 to 18 hours for grassed surfaces and 15 to 20 hours for unbound mineral surfaces.

3.5.2 SPRINKLING PROCEDURES

3.5.2.1 Grass Surfaces

Grass surfaces have to be sprinkled during prolonged rain-free periods. The water sprinkled must be sufficient to saturate the construction, for example the grass-supporting layer must be fully moistened. Between 15 l and 25 l per m^2 are required for this.

Grass must be sprinkled, at the very latest, when it shows the first signs of wilting. If this occurs, the grass surface shows patches measuring 0.10m to 0.30m in diameter with a dark, grey-green grass colour and rolled grass blades.

The intervals between sprinkling intervals (water cycles) depend on the maximum day-time temperatures on which the guide values in Table 3.5.2.1 are based.

3.5.2.2 Unbound Mineral Surfaces

Unbound mineral surfaces are sprinkled with water at a rate of 10 l to 15 l per m^2. Such action is necessary to combat the first signs of dust generation and the deterioration of surface shear strength which manifests itself in a loosening of the surface.

Maximum Daytime Temperature (°C)	Sprinkling Interval (Days)
Over 30	Approx. 5
25 to 30	6 to 8
20 to 25	8 to 12
Under 20	Over 12

Table 3.5.2.1 - Relation between maximum daytime temperature and sprinkling intervals

3.5.3 SPRINKLER SYSTEMS

3.5.3.1 Non-stationary Sprinkler Systems

Temporarily laid sprinkler systems with tripod-mounted sprinklers or pressure pipes with built-on sprinklers must be stable. Feed lines and connections must be watertight. The sprinkler equipment may only be moved when the ground is firm underfoot and no longer sodden.

By permitting a running speed independent of water pressure, mobile sprinklers must permit as high a water output as possible. Experience has shown that even with an ideal water pressure this is well below the quantity actually required, so the sprinkling of each area may have to be repeated.

Because of the high costs of labour, low uniformity of water distribution and the insufficient water output of mobile sprinklers, non-stationary sprinkler systems are not recommended.

The most common non-stationary sprinkling methods are shown in Figures 3.5.3.1a to 3.5.3.1c.

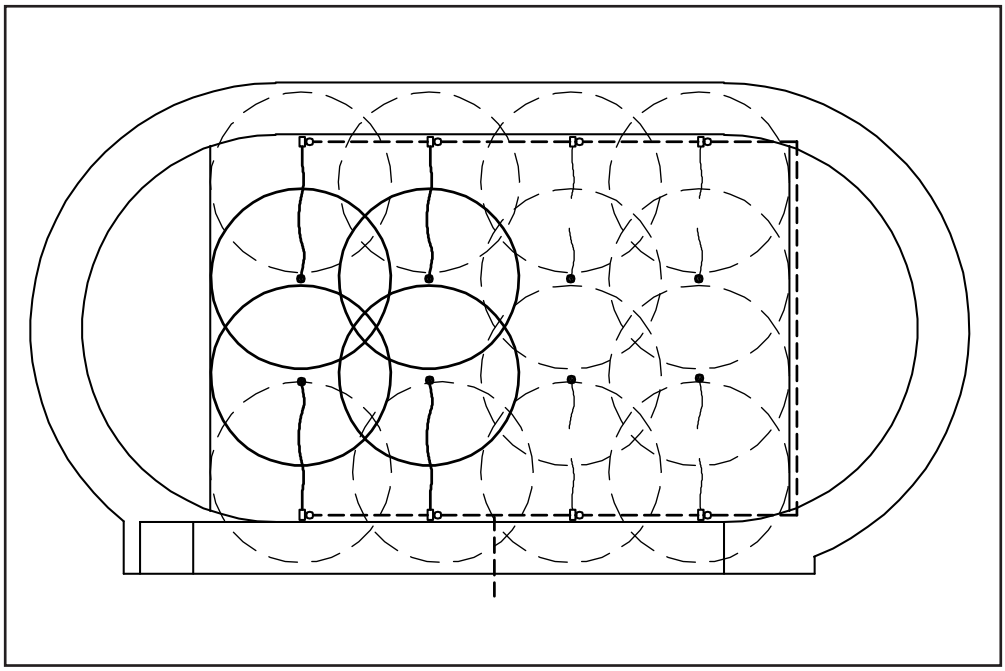

Figure 3.5.3.1a - Sprinkling with hose-fed tripod-mounted sprinklers

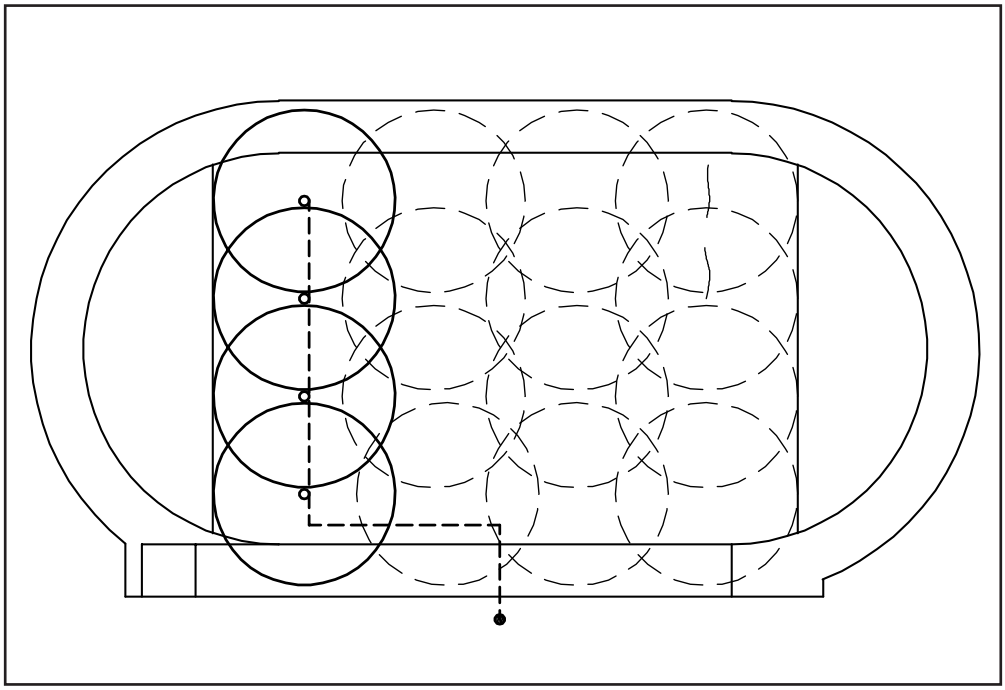

Figure 3.5.3.1b - Sprinklers on temporarily laid pressure pipes

3.5.3.2 Stationary Sprinkler Systems

Stationary sprinkler systems consist of feed lines made of plastic or steel, laid in trenches, which supply the sprinklers with pressurised water. The diameter of the pipes must exceed 65mm. The pipe trenches should be 0.30m wide and 0.30m to 0.50m deep. To prevent frost damage, it should be possible to drain the feed lines, e.g. by laying the pipes on a gradient or by using compressed air.

Sprinklers for irrigating sports surfaces are available in the form of swing-arm sprinklers which turn mechanically, driven by the force of the water jet, and geared sprinklers on which the jet is turned by a turbine gear.

The sprinkler covers are flush with the sports surface when closed. The covers pop up under the pressure of the water when the sprinklers are switched on. The water is distributed by 360° sprinklers situated within the playing area, 180° sprinklers at the edge of the playing area or on the inside of running tracks, and 90° sprinklers in the corners of the playing area.

A sprinkler system is subdivided with hydraulic or electric control lines into sprinkling areas so as to make efficient use of the available quantity of water and water pressure. The valves on the sprinkler, which regulate the discharge of water, are opened and closed by hydraulic or electrical pulses. Occasionally, the valves are installed outside the playing area in the feed lines, in which case each sprinkler must have its own feed line. The sprinkler operating period is usually controlled via the control line with timers.

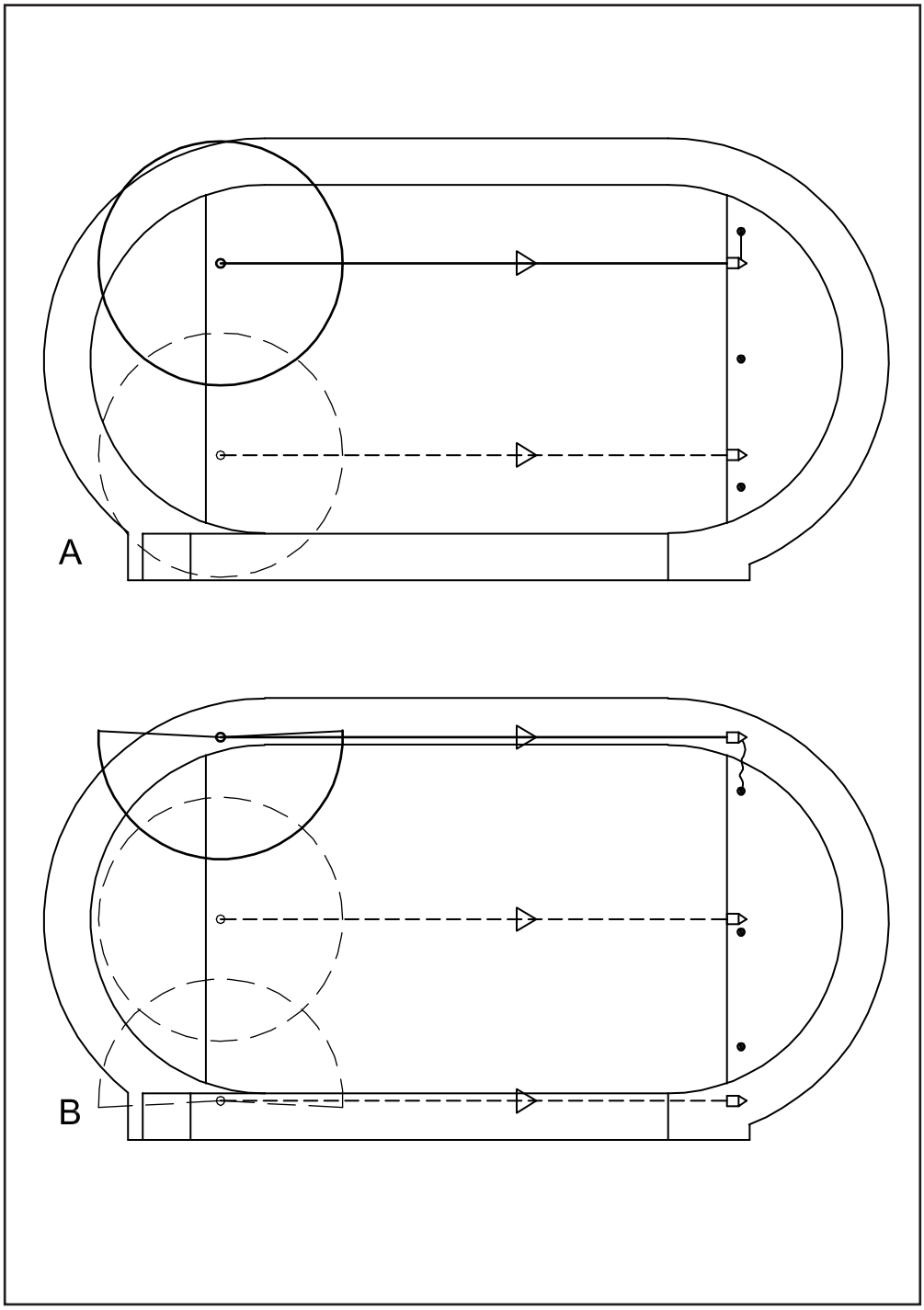

Figure 3.5.3.1c - Sprinkling with trolley-mounted sprinklers

A Used as full-circle sprinklers on the field
B Used as full-circle sprinklers in the centre of the field and as semicircle sprinklers at the sides, positioned on the track

Depending on the type of sports surface and the required uniformity of distribution, the following arrangements are recommended:

- Large playing field with artificial grass surface and a track with a synthetic surface (Figure 3.5.3.4a)
- Large playing field with a grass surface and a track with a synthetic surface, sprinkling with a distribution of high uniformity (Figure 3.5.3.4b)

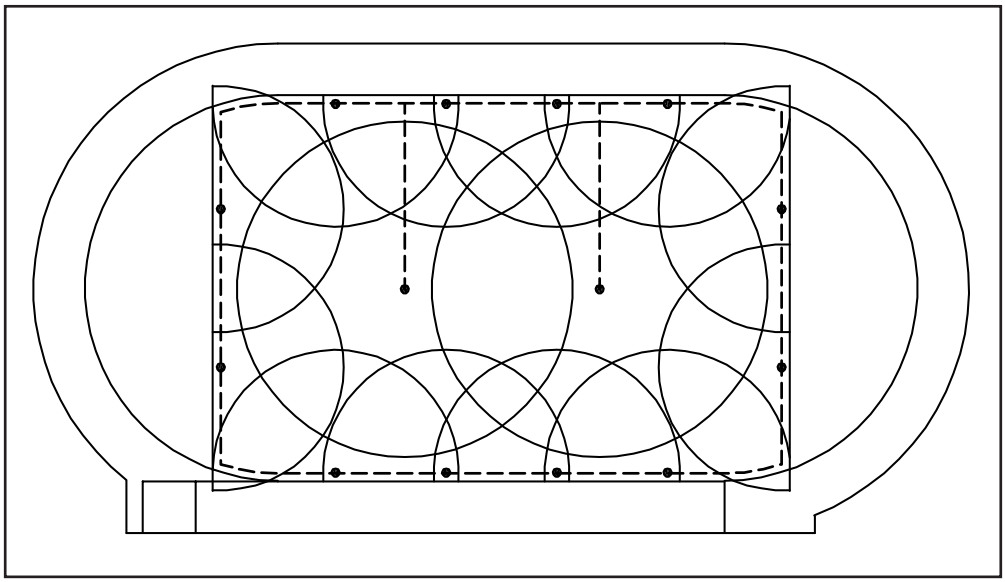

Figure 3.5.3.4a - Stationary sprinkler system for playing fields with artificial grass surface and a track with synthetic surface

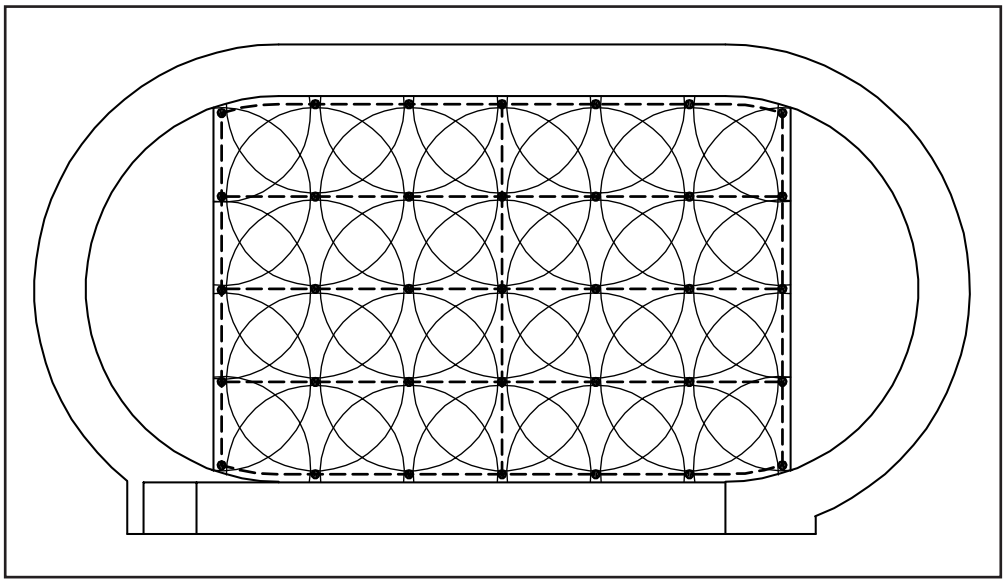

Figure 3.5.3.4b - Stationary sprinkler system for playing field with grass surface and a track with synthetic surface, sprinkling with a distribution of high uniformity

3.5.4 WATER SUPPLY RATE AND WATER PRESSURE

The necessary water supply rate for a sprinkler system must be at least 20m^3 per h. Non-stationary sprinkler systems require lower water supply rates, although the quantity delivered is usually insufficient. If the required rate of water cannot be supplied, a sufficiently large water reservoir should be provided.

The sprinkling range depends on the flow pressure at the sprinkler. On stationary systems this must be at least 5.5 bar at the sprinkler. Depending on the pipe lengths, at least 6.5 or 7 bar is necessary at the point where the feed lines are connected to the mains supply. If this water pressure is not available, a pressure booster is necessary.

3.5.5 WATER SUPPLY

The tapping of water, from whatever source, requires approval from the relevant authorities.

3.5.5.1 Mains Supply

Water is usually supplied from the mains water supply. A non-return valve should be fitted to prevent contamination of the drinking water by a backflow of water from the sprinkler feed lines or through storage tanks.

The locally-available water pressure and supply sources, which should be ascertained before planning the system, determine whether pressure boosters or storage tanks need to be installed.

The variation in water prices affects the maintenance costs of sports surfaces.

3.5.5.2 Open Water Bodies

Water is tapped from streams, rivers and lakes by means of an underwater pump with a suction tube. The pumps, pipe network and sprinklers must be protected from contamination. Before using any of these sources, the water should be checked for its suitability in terms of plant-compatibility, degree of contamination and the seasonal fluctuations in water availability.

These sources of water are usually cheaper.

3.5.5.3 Wells

If there is sufficient groundwater, water can be obtained from drilled wells with submersible pumps suspended in filter pipes. Cost-effectiveness depends on the drilling depth and water delivery rate. Test bores are, therefore, recommended.

3.5.5.4 On-site Water Storage

As a water conservation measure, roof water and surface drainage may be collected on site either in tanks or surface dams to be used for toilet flushing, surface cleaning and grass irrigation. A reticulation system separate from the mains potable water supply is required.